ATTACHMENT B

TECHNICAL REQUIREMENTS AND CRITERIA

DESIGN CRITERIA REQUIREMENTS FOR TV TOWER AND CCTV CONDUIT RACEQWAYS

A. TV Tower:

1. A/E design shall specify the installation of a metal monopole TV tower with a minimum exposed-height of 125 feet above finish grade. TV Tower design shall include but not be limited to the following:
   a. All antennas, cables, and accessories as noted in M-DCPS Design Standards.
   b. Proper grounding in accordance with NEC, and lighting protection in accordance with NFPA 780.
   c. A safety climbing cable beginning at 20 feet above finish grade and terminating at the top of pole, with mid position latches located 25 feet on-centers.
   d. One (1) 36" high x 24" wide x 8" deep Nema R3 weatherproof enclosure containing an oval-shape hinged access-panel a minimum of 30" high x 10" wide. Enclosure shall be mounted to the base of the tower so that the bottom of the enclosure is 36" above finish grade. Provide one (1) 120V GFI quadraplex outlet mounted on the lower right hand corner within the enclosure.
2. The design of the TV Tower shall comply with Florida Building Code. A/E shall submit to the Building Code Consultant (BCC) calculations signed and sealed by a Florida registered professional engineer establishing compliance with the requirements of ASCE- 7 adopted by the FBC applicable to the project.
3. The TV tower shall be located so as to have clear line-of-sight of the M-DCPS transmitter. The A/E shall consult with M-DCPS Media Programming (WLRN) – Field Engineering Office [(786) 275-0808] prior to determining the on-site location for the TV Tower.
4. The TV tower shall be located so that the wiring run from the base of the TV tower to the ITV "Hub" junction box located adjacent to the ITV Head End Equipment Rack, does not exceed 300 foot unless prior approval is obtained in writing from M-DCPS Media Programming (WLRN) – Field Engineering Office [(786) 275-0808]
5. The A/E shall employ the services of a qualified telecommunications firm, having professional experience in measuring electromagnetic (microwave) emissions, to determine whether a clear radio path line-of-sight exist between the transmitter antenna located 800 feet above grade level (AGL) at 3300 SW 52 Avenue, Pembroke Park, FL 33023 (coordinates 25° 58′ 47.0" North and 80° 11′ 45.0" West), and the receiver antenna located 125 feet AGL at the proposed school site.
   a. All final calculations shall include 125-foot long, 1/2" heliax cable signal attenuation from the antenna, due to signal loss from the antenna to the down-converter located at the base of the TV tower.
   b. Results from the test shall be used by the A/E to determined best suitable location for the TV tower.
6. A copy of the TV tower design (height, type, location, etc.), and a copy of Line-of-Sight and Signal Strength Testing report, shall be provided to M-DCPS Media Programming (WLRN) - Field Engineering Office (786) 275-0808, for review

and acceptance prior to final documents are submitted to the BCC for permitting purposes.

7. Broadband amplifiers may be allowed only when accepted by M-DCPS Media Programming (WLRN).

B. Other Requirements:

1. From the 36" high x 24" wide x 8"deep Nema-3R enclosure located at the base of the new TV Tower, provide one (1) 4" conduit terminating at the "Hub" junction box located directly behind the existing CCTV Head End Equipment Rack. This conduit shall be provided complete with two (2) RG-11 cables with proper end connectors; one for ITV signal and the other for FM signal. The RG-11 cable designated for the ITV signal shall be extended into the "Hub" junction box and final connections to the ITV equipment will be performed by M-DCPS Media Programming (WLRN) personnel. The RG-11 cable designated for FM signal shall be extended through the "Hub" junction box to the public address (P/A) head-end equipment rack, where the final connection to the FM equipment will be performed by M-DCPS Audio/Visual personnel.
NOTE: When the total distance (including horizontal and vertical runs) from the base of the ITV Tower to the Head End Equipment Rack exceeds 300 feet, replace the RG-11 cable designated for the ITV signals with a 75 Ohm coaxial cable Model No PIII 700 JCASS by CommScope. This cable shall be installed with no splices along its entire run and shall be terminated with 75 Ohms type "F" female connector on both ends. Provide pull boxes at a maximum "on-center" distance of 150 feet along the entire raceway. At exterior areas, provide Brooks Products Model No. 66 (30" L x 17" W) traffic rated pull boxes w/covers, or approved equal. At interior areas provide a standard 18" L x 18" W x 8" D metal junction box with cover.
2. See M-DCPS Design Standards and M-DCPS Design Criteria Appendix for additional ITV requirements.

SECTION 13780 (modified 9-18-09)

TELEVISION/RADIO FREQUENCY SYSTEMS

PART 1 GENERAL

1.01 SUMMARY

A. Section Includes:

1.
2. Installations at additions/renovations with adjacent operational television/radio frequency systems, requiring wiring and connection to the headend of the existing system, with conduit, cables, and broadband amplifiers as needed.

****** ***** **** *** ** * ** *** **** ***** ******

NOTE TO SPECIFIER: The diagrams referenced in the following paragraph are located in M-DCPS Design Criteria Appendix.

****** ***** **** *** ** * ** *** **** ***** ******

3. TV Radio Frequency System Headend Block Diagrams - Basic Installation and Alternate Installation, attached to and a part of this section.

B. Related Sections:

1. 01530 - Barriers.
2. 02221 - Excavating, Backfilling, and Compaction for Utilities.
3. 02830 - Chain Link Fences and Gates.
4. 03300 - Cast-In-Place Concrete.
5. 16112 - Raceways and Conduits.
6. 16120 - Wires and Cables.
7. 16131 - Outlet, Pull, and Junction Boxes.
8. 16402 - Electrical Site Utilities.
9. 16450 - Grounding.
10. 16670 - Lightning Protection System.

1.02 SYSTEM DESCRIPTION

A. Provide a television system, with Radio Frequency (RF) levels at all locations for channels specified, meeting minimum requirements as outlined in this section.

B. Provide a 125 foot exposed height (minimum) galvanized metal monopole structure and antenna according to the Drawings.

1.03 SUBMITTALS

A. Submit shop drawings necessary for review by A/E and to show compliance with this section.

B. Submit manufacturer's and maintenance manuals complete with replacement parts data.

C. At project completion, provide shop drawings and as-builts of TV system installation for final review, site test, and maintenance operations. Include locations of amplifiers and conduit identification.

D. Provide proof of compliance, sealed and signed by a Florida registered structural engineer that the entire assembly of the new tower with antennas, and the like, meet the design requirements for wind loads based on wind velocity pressures determined by American Society of Civil Engineers (ASCE) 7 referenced in the FBC applicable for this project.

E. Quality Assurance/Control Submittals: Florida registered engineer shall submit signed and sealed drawings indicating;

1. Structural/wind load calculations.
2. Mounting details.
3. Grounding and lightning protection.

1.04 QUALITY ASSURANCE

A. Notification: Notify the A/E before the start and at completion of the work.

B. Items shall be listed by Underwriters Laboratories (UL), bearing the UL seal and marked according to referenced standards.

PART 2 PRODUCTS

2.01 MANUFACTURERS

A. Educational Broadcast System (EBS):

1. EBS Down-converter: Model No. HLN3 as manufactured by Conifer Wireless Telecommunication Technology. No substitution allowed.
2.
3. Parabolic Antenna: Model No.P-2548GR by Mark Antenna Products or accepted equivalent.
4. Heliax Cable: 1/2" super flex FSJ4-50B by Andrew Corporation.
5. Heliax Connectors: Model F4PNMV2-H by Andrew Corporation.

B.

C.

D.

E.

F.

G.

H. Coaxial Cable TV Signal Distribution:

1.
2. Main and Sub-Trunk Lines, Type RG11/U: Model No. 1523A as manufactured by Belden or accepted equivalent as may be approved in writing by M-DCPS Media Programming (WLRN) Field Engineering Office [(786) 275-0808].
3. Main and Sub-Trunk Underground Lines (Always in conduit): RG11 Model No. 1525A Duobond Plus as manufactured by Belden or accepted equivalent as may be approved in writing by M-DCPS Media Programming (WLRN) Field Engineering Office [(786) 275-0808].

I.

J.

2.02 MATERIALS

A.

B.

C.

D.

E. Educational Broadcast System (EBS)Conversion:

1. Provide a weatherproof microwave down-converter, Model No. HLN3 as manufactured by Conifer Wireless Telecommunication Technology, and locate within the 36" h x 24" w x 8" d Nema-3R junction box located at the base of the metal monopole tower.
2. Cable from dish to down converter shall be low loss, 1/2 inch Heliax Superflex model FSJ4-50B with connectors F4PNMV2-H, factory installed.
3. Provide a 3 GHz Surge Protector at the input side of the down-converter with a 50 ohms type "N" female connection at both ends.
4. Provide a 1 GHZ Surge Protector at the output side of the down-converter with 75 ohms type "F" female connection at both ends.

2.03 SYSTEM EQUIPMENT

A.

B. Antenna Wind Resistance:

1. Components shall withstand wind pressure velocities determined by ASCE 7 referenced in the FBC applicable for this project.
2. Use a wind speed of 146 mph, exposure category "C", and a wind load importance factor of 1.15.

C.

1.
2.
3. FM Band Antenna: Gain of 6.7 dB front to back ratio of 18 dB. Interface antenna with public address system.

D.

E.

F. EBS Down-converter: Provide state of the art reception of 2500 MHZ television signals and down-convert to cable band (Quam)

G. EBS:

1. Parabolic Antenna: Single grid dish type capable of receiving 2500 MHZ television signals.

   a. Aperture: 4 feet.
   b. Gain: 28.0 dB ± 2 dB at 2600 MHZ.
   c. Vertical Beamwidth: 7 degrees or less.
   d. Horizontal Beamwidth: 7 degrees or less.

H.

I.

J.

K.

L. Coaxial Cable TV Signal Distribution:

1.
2. Type: RG11/U.

   a. Frequency: 600 MHZ.
   b. Attenuation (dB/100 max): 3.18.
   c. Use: Main and Sub Trunk lines.
   d. Conductor Material and Diameter: 14 AWG solid bare copper covered steel 0.064".
   e. Dielectric Material and Diameter: Gas injected foam polyethylene 0.285".
   f. Shield Type: Bonded duofoil, 77 percent aluminum braid, bonded foil-shorting fold.
   g. Jacket Material and Diameter: PVC (black) 0.405".
   h. Nominal velocity of propagation: 82 percent.
   i. Impedance 75 ohms.
   j. 100 percent shielded coverage.
   k. 100 percent sweeptested 5 MHZ to 600 MHZ.
   l. UL/NEC and CSA Rating: CATV and FT-1.
   m. Flame Test: UL 1581 vertical tray.

3. Type: RG11 Duobond Plus.

   a. Frequency: 600 MHZ.
   b. Attenuation (dB/100 max): 3.18.
   c. Use: Main and Trunk under ground lines.
   d. 77 percent braid product code 9764.

e. Flooded direct burial cable.
f. Impedance 75 ± 3 ohms.
g. Nominal velocity of propagation 82 percent.
h. Nominal delay 1.2 ns/ft.
i. Attenuation 600 MHZ 3.18 dB/100 ft.

M. Galvanized metal monopole structure and antenna.

N.

O. Lightning Protection System: Copper or bronze components, UL listed and of the size weight and construction for use according to UL requirements, applicable Codes or manufacturer's recommendations whichever is more stringent.

2.04 SOURCE QUALITY CONTROL

PART 3 EXECUTION

3.01 INSTALLATION

A. Install the TV system according to applicable codes, accepted shop drawings and wiring diagrams, and as specified in this section.

1.

2. Use conduit in exposed areas such as hallways.

B. System Wiring: Install according to manufacturer's wiring diagram as required for proper operation of TV system. Install wiring in conduit.

C. Ground the system as indicated on the drawings as prepared by a Florida registered professional engineer.

D.

E.

F.

G. Install and mount galvanized metal monopole antenna structure and antenna according to the Drawings.

H. Lightning Protection System:

1. Install according to NEC, NFPA 780, UL 96A, Lightning Protection Institute (LPI) standards, other applicable codes and standards, and according to the Drawings.
2. Connections made in lightning protection system shall be electrically continuous to ground rods.

3.02 FIELD QUALITY CONTROL

A. Site Tests:

1. Check and test the system for shorts, grounds, continuity, and proper functioning and operation.
2. Perform final connections of equipment, testing of system, and other necessary adjustments by a certified factory trained technician, employed by or under the direct supervision of the equipment manufacturer.
3. Upon completion of installation, test entire system in presence of A/E and the Board.
4. Furnish RF meter, receiver, and spectrum analyzer acceptable to A/E, demonstrating signal strength and quality at the base of the tower and at the Distribution Rack "Hub" junction box.

END OF SECTION

UNC DESIGN NUMBER	OVERALL HEIGHT	POLE HEIGHT	MONOTUBE "A"	TSJ1	MONOTUBE "B"	TSJ2	MONOTUBE "C"	TSJ3	MONOTUBE "D"	QTY ANC BOLTS	BASE PLATE DATA B.C.	RO	P	T	ANC BOLT SIZE
RA500-B11-Y1	137'-0"	125'-0"	0E-13.17x7.85x38'-0"	27"	27E-16.60x12.23x31'-3"	30"	23E-19.94x15.53x31'-6"	36"	0+3E-23.0x18.52x32'-0"	12	30"	37"	9 1/2"	2 1/2"	2 1/4"x90"x6"
RA500-B11-Y2	122'-0"	110'-0"	3E-11.36x7.50x27'-0"	24"	0E-14.22x10.58x26'-0"	27"	3+7E-18.04x13.28x34'-0"	33"	23E-21.0x16.80x30'-0"	12	30"	37"	9 1/2"	2 1/2"	2 1/4"x90"x6"
RA500-B11-Y3	117'-0"	105'-0"	3E-11.36x8.28x22'-0"	24"	0E-14.22x10.58x26'-0"	27"	3+7E-18.04x13.28x34'-0"	33"	23E-21.0x16.80x30'-0"	12	30"	37"	9 1/2"	2 1/2"	2 1/4"x90"x6"

ALL TUBES ARE ROUND WITH UNIFORM TAPER OF 0.14 INCHES PER FOOT.

DESIGNATION	WALL THICKNESS
3E	0.250 INCHES
0E	0.313 INCHES
27E	0.358 INCHES
3+7E	0.429 INCHES
23E	0.500 INCHES
0+3E	0.563 INCHES

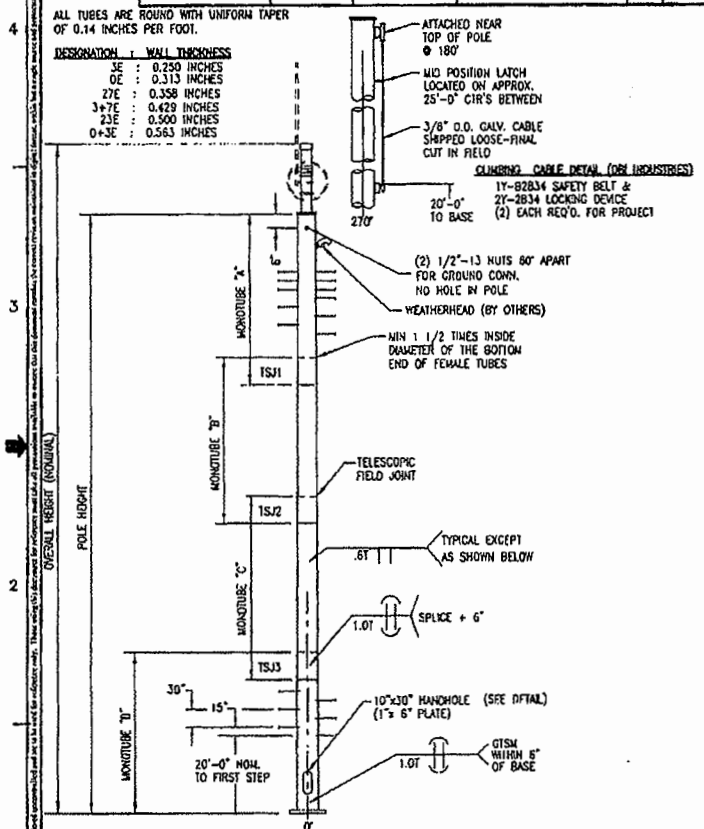

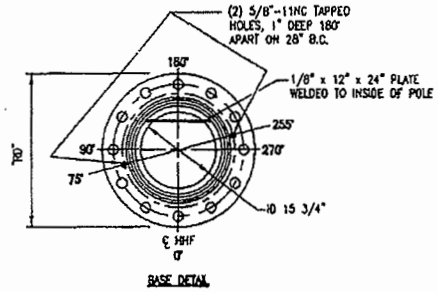

BASE DETAIL

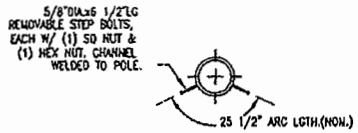

POSITIONING OF STEP BOLTS WHERE POLE DIA. EXCEEDS 16"

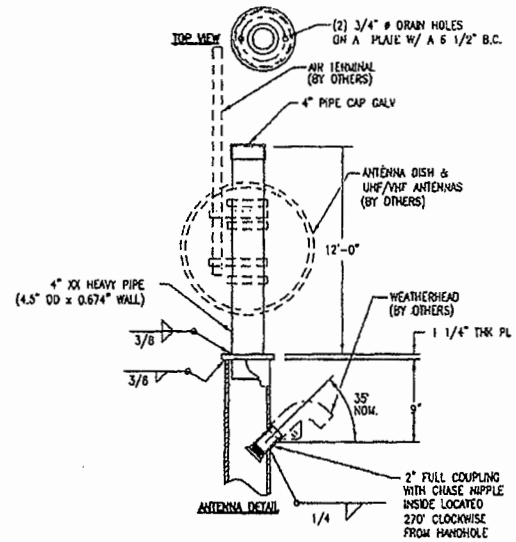

ANTENNA DETAIL

DESIGN CRITERIA:

The structure shall be designed in accordance with the Florida Building Code (ASCE 7-98) to support (1) one 4 foot diameter grid dish for ITFS, (1) one VHF log period, (1) one UHF log period and (1) one FM cross folded antenna. The design wind speed shall be 150 MPH with an Importance Factor of 1.15. The Gust Effect Factor shall be 1.07. The Wind Directionality Factor shall be 0.95. An additional factor of 1.30 shall be applied to the wind pressure to account for the increased wind drag due to step bolts and climbing cable. No Load Reduction or allowable stress increase shall be allowed in the design. The structure shall also meet Fatigue Category I for high mast structures per the 2001 AASHTO Standard Specifications for Structural Supports for Highway Signs, Luminaires and Traffic Signals, including the 2003 Interim.

MATERIAL SPECIFICATIONS	
TUBES	ASTM-A595 GR. A
PLATE	ASTM-A36
HANDHOLE FRAME	ASTM-A572 GR. 50
TENON	ASTM-A53 GR B
ANCHOR BOLTS	ASTM-F1554 GR 55
A. BOLT NUTS	ASTM-A563 GR.DH
STRUCTURE FINISH	H.D. GALV. TO ASTM-A123
HARDWARE FINISH	H.D. GALV TO ASTM-A153

REV	DESCRIPTION	DATE	REV BY	CHK BY
R4	FOR REQ. FL-13413-5 CHANGED JUNCTION BOX SIZE, WAS 34"x36"x25"; CHANGED DWG. CH, WAS 3836AW; BASEPLATE CH, WAS 3836AP.	9/17/08	CDK	SKO
R3	ADDED JUNCTION BOX OPTION & SHT.2. FL-13413-2	7/2/06	LHK	SKO

REVISIONS

STATE: FLORIDA | REQ# / SO# :

PROJECT NAME:

ROUND TAPERED STEEL SELF SUPPORT ANTENNA POLE FOR MIAMI DADE COUNTY PUBLIC SCHOOLS (MDCPS)
PREPARED FOR: MIGUEL GARCIA, FIELD ENGINEERING MANAGER

Union Metal Corporation

This document and the content herein are proprietary and the property of Union Metal Corporation. This document is not to be, copied, reproduced, or used for any reason except for the purposes which it was issued without the express written consent of Union Metal Corporation. Furthermore Union Metal Corporation reserves the right to recall this document and all copies at any time for any reason.

DESIGNED BY	CHECKED BY	DATE	SCALE	ENG REF
DNF	[illegible]	7/28/06	NTS	72118-B141

RA500-B11 | REVISION R4 | SHEET 1 OF 2

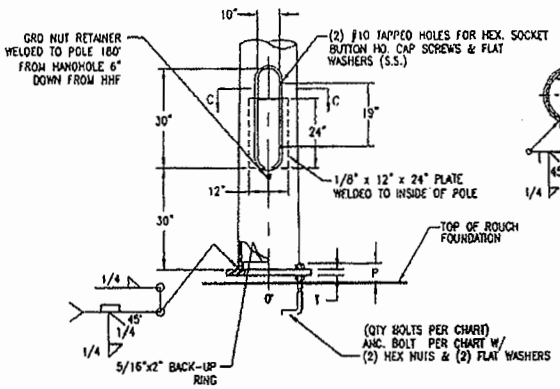

HANDHOLE FRAME DETAIL

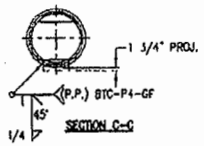

SECTION C-C

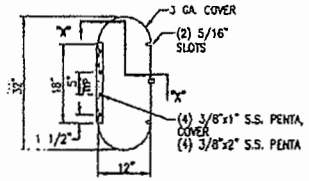

HANDHOLE COVER

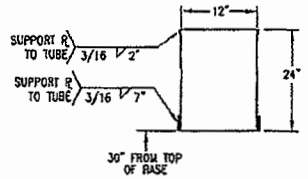

PLATE FOR DOWN CONVERTER

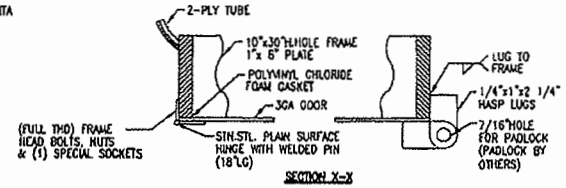

SECTION X-X

DETAILS BELOW ARE FOR AN OPTIONAL JUNCTION BOX. IF REQUIRED, THE OPTION MUST BE SPECIFIED WITH THE PURCHASE ORDER. DESIGNS WITHOUT THE JUNCTION BOX WILL USE ONLY THE DETAILS ABOVE. DESIGNS WITH THE JUNCTION BOX WILL USE ONLY THE DETAILS BELOW.

WHEN ORDERING A DESIGN WITH THE JUNCTION BOX, ADD A "J" TO THE DESIGN NO.
EXAMPLE: RA500-B11-YJV

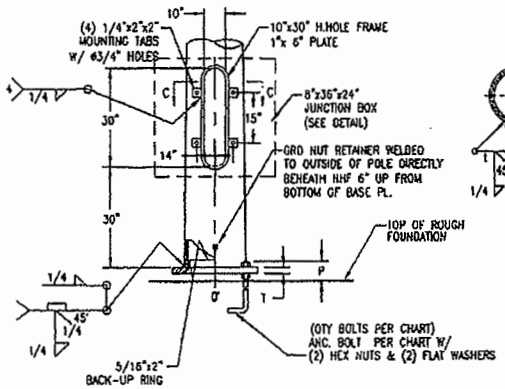

HANDHOLE FRAME DETAIL

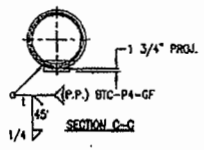

SECTION C-C

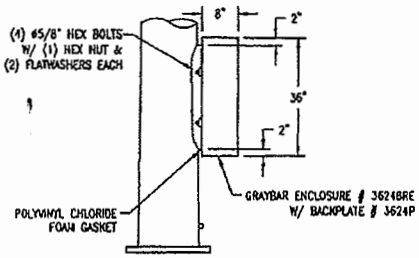

JUNCTION BOX DETAIL

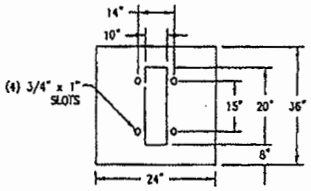

BACK OF JUNCTION BOX DETAIL

STATE: FLORIDA	REQ# / SO# :	REV	DESCRIPTION	DATE	REV BY	CHK BY
PROJECT NAME:			REVISIONS			

ROUND TAPERED STEEL SELF SUPPORT ANTENNA POLE FOR MIAMI DADE COUNTY PUBLIC SCHOOLS (MDCPS)
PREPARED FOR: MIGUEL GARCIA, FIELD ENGINEERING MANAGER

Union Metal Corporation

This document and the contents herein are proprietary and the property of Union Metal Corporation. This document is not to be, copied, reproduced, or used for any reason except for the purpose which it was issued without the express written consent of Union Metal Corporation. Furthermore Union Metal Corporation reserves the right to recall this document and all copies at any time for any reason.

DESIGNED BY	CHECKED BY	DATE	SCALE	DWG REF
DNF	DNF	7/28/06	NTS	72118-B141
RA500-B11			REVISION R4	SHEET 2 OF 2

Union Metal Corporation

CANTON, OHIO 44711

6/24/05 10:25 AM

COMPUTER ANALYSIS OF:

ROUND TAPERED STEEL SELF SUPPORT ANTENNA POLE

FOR

MIAMI DADE COUNTY PUBLIC SCHOOLS

125' POLE - 137' HEIGHT TO TOP OF TENON

DESIGNED TO:

150 MPH WIND -ASCE 7-98 & 2001 AASHTO FATIGUE CATEGORY I
AND
CUSTOMER SPECIFICATIONS

D.N. 78
7-1-05

CALCULATIONS BY: D. N. Fritz
D. N. FRITZ
PRODUCT ENGINEER

David N. Fritz
678 Tuscarawas Ave.
Brewster, Ohio 44613
54936

UNION METAL CORPORATION
1432 Maple Avenue NE, Canton, Ohio 44705
Phone:330-456-7653 Fax: 330-456-0196
Mast Arm and Pole Design Program - Version 2.0.1 - April 4, 2005
Engineer: David N. Fritz, PE
Phone: 330-458-5266
Fax: 330-458-5276
Email: fritz@unionmetal.com
Computer File: C:\Mast Arm Data\DadeSchoolAntenna-150.dat
6/24/2005 11:00:07 AM

UMC Reference No.
Structure Description: ROUND TAPERED STEEL SELF SUPPORT ANTENNA STRUCTURE
Project Description: MIAMI DADE COUNTY PUBLIC SCHOOLS
Design Code: ASCE 7-98 & 2001 AASHTO FATIGUE CATEGORY I
Basic Wind Speed: 150 mph
Wind Pressure Method: ASCE 7-98
Gust Effect Factor: 1.30
Allowable Stress Increase for Wind: 1.00
Ice Loading: 3.0 psf

Structure Design Life: N/A yrs
Wind Importance Factor: 1.15
Wind Exposure: Alpha: 9.5 Zg: 900 ft Zmin: 16.4 ft
Fatigue Category: I
Fatigue Structure Type: High Level Lighting
Galloping: Importance Factor: N/A Basic Pressure: 21.0 psf
Natural Wind Gust: Importance Factor: 1.00 Basic Pressure: 5.2 psf Yearly Mean Wind Speed: 11.2 mph
Truck-Induced Gust: Importance Factor: N/A Basic Pressure: 18.8 psf Truck Vehicle Speed: 65 mph

Structure Identification: 125' POLE HEIGHT - 137' HEIGHT TO TOP OF TENON

Pole - Structure Data
Number of Tubes: 5
Total Pole Length: 137.00 ft
Tube 1: 0.563 in wall x 23.00 in OD x18.52 in OD x 32.00 ft length
Tube 2: 0.500 in wall x 19.94 in OD x 15.53 in OD x 31.50 ft length w/ 3.00 ft Slip Joint Splice
Tube 3: 0.358 in wall x 16.60 in OD x 12.23 in OD x 31.25 ft length w/ 2.50 ft Slip Joint Splice
Tube 4: 0.313 in wall x 13.17 in OD x 7.85 in OD x 38.00 ft length w/ 2.25 ft Slip Joint Splice
Tube 5: 0.674 in wall x 4.50 in OD x 4.50 in OD x 12.00 ft length (Tenon)
Pole Base Connection Type: Base Plate with Anchor Bolts
Anchor Bolt Specification: ASTM-F1554 GR 55
Anchor Bolt Diameter: 2.25 in
Number of Bolts: 12
Base Plate Shape: Round
Anchor Bolt Orientation: X-axis aligned with bolts
Base Plate Type: Full Weld Backup - Full Pen.
Plate Specification: ASTM-A36
Base Plate Thickness: 2.50 in
Bolt Circle: 30 in
Plate Width: 37 in
Pole Signal Loads (lbs)(ft)

No.	Height	Orientation	Weight	Front Area	Side Area	Ice Area	Horz. Cd	H. Offset
1	135	0	90	12.57	7.41	0	0.46	2
2	123	0	30	1.9	1.9	0	1.21	2

3	123	0	20	0.34	0.5	0	1.21	2
4	123	0	30	1.3	1.3	0	1.21	2

Pole - Member Geometry (ft) - Section Properties (in)

Member	Yi	Yj	Length	WindHt	Wall	ODi	ODj	AveOD	Si	Sj	Ai	Aj	Ri	Rj	Taper	Shape	Material
1	0.00	14.50	14.50	7.25	0.563	23.00	20.97	21.99	222.49	184.05	39.66	36.08	11.22	10.20	0.14	Round	ASTM A595 GR A
2	14.50	29.00	14.50	21.75	0.563	20.97	18.94	19.96	184.05	149.25	36.08	32.49	10.20	9.19	0.14	Round	ASTM A595 GR A
3	29.00	32.00	3.00	30.50	1.063	19.94	19.52	19.73	297.35	284.27	63.01	61.61	9.44	9.23	0.14	Round	ASTM A595 GR A
4	32.00	45.00	13.00	38.50	0.500	19.52	17.70	18.61	141.99	116.12	29.86	27.00	9.51	8.60	0.14	Round	ASTM A595 GR A
5	45.00	58.00	13.00	51.50	0.500	17.70	15.88	16.79	116.12	92.84	27.00	24.15	8.60	7.69	0.14	Round	ASTM A595 GR A
6	58.00	60.50	2.50	59.25	0.858	16.60	16.25	16.43	166.91	159.57	42.41	41.47	7.87	7.70	0.14	Round	ASTM A595 GR A
7	60.50	73.75	13.25	67.13	0.358	16.25	14.40	15.32	70.98	55.37	17.86	15.78	7.95	7.02	0.14	Round	ASTM A595 GR A
8	73.75	87.00	13.25	80.38	0.358	14.40	12.54	13.47	55.37	41.71	15.78	13.69	7.02	6.09	0.14	Round	ASTM A595 GR A
9	87.00	89.25	2.25	88.13	0.671	13.17	12.86	13.01	82.29	78.19	26.33	25.67	6.25	6.09	0.14	Round	ASTM A595 GR A
10	89.25	106.13	16.88	97.69	0.313	12.86	10.49	11.67	38.65	25.46	12.33	10.00	6.27	5.09	0.14	Round	ASTM A595 GR A
11	106.13	123.00	16.88	114.56	0.313	10.49	8.13	9.31	25.46	15.01	10.00	7.68	5.09	3.91	0.14	Round	ASTM A595 GR A
12	123.00	125.00	2.00	124.00	0.313	8.13	7.85	7.99	15.01	13.96	7.68	7.41	3.91	3.77	0.14	Round	ASTM A595 GR A
13	125.00	135.00	10.00	130.00	0.674	4.50	4.50	4.50	7.74	7.74	8.10	8.10	1.91	1.91	0.00	Round	ASTM A53 GR B
14	135.00	137.00	2.00	136.00	0.674	4.50	4.50	4.50	7.74	7.74	8.10	8.09	1.91	1.91	0.00	Round	ASTM A53 GR B

Pole - Member Applied Loads (ft & lbs)

Group I

Member	Fx	Fy	Fz	Mx	My	Mz	Wx	Wy	Wz	Tx	Ty	Tz
1	0	0	0	0	0	0	0.00	122.76	0.00	0.00	12.21	0.00
2	0	0	0	0	0	0	0.00	110.55	0.00	0.00	12.21	0.00
3	0	0	0	0	0	0	0.00	209.63	0.00	0.00	4.77	0.00
4	0	0	0	0	0	0	0.00	91.89	0.00	0.00	9.72	0.00
5	0	0	0	0	0	0	0.00	82.17	0.00	0.00	9.72	0.00
6	0	0	0	0	0	0	0.00	141.11	0.00	0.00	3.21	0.00
7	0	0	0	0	0	0	0.00	53.69	0.00	0.00	7.10	0.00
8	0	0	0	0	0	0	0.00	46.60	0.00	0.00	7.10	0.00
9	0	0	0	0	0	0	0.00	87.35	0.00	0.00	2.26	0.00
10	0	0	0	0	0	0	0.00	34.04	0.00	0.00	7.90	0.00
11	0	80	0	-160	0	0	0.00	26.14	0.00	0.00	7.90	0.00
12	0	0	0	0	0	0	0.00	25.21	0.00	0.00	0.94	0.00
13	0	90	0	-180	0	0	0.00	27.55	0.00	0.00	0.01	0.00
14	0	0	0	0	0	0	0.00	27.54	0.00	0.00	0.00	0.00

Group II

Member	Fx	Fy	Fz	Mx	My	Mz	Wx	Wy	Wz	Tx	Ty	Tz
1	0	0	0	0	0	0	58.57	122.76	0.00	5.67	12.21	0.00
2	0	0	0	0	0	0	56.14	110.55	0.00	6.02	12.21	0.00
3	0	0	0	0	0	0	62.13	209.63	0.00	1.34	4.77	0.00
4	0	0	0	0	0	0	59.17	91.89	0.00	6.08	9.72	0.00
5	0	0	0	0	0	0	56.44	82.17	0.00	6.47	9.72	0.00
6	0	0	0	0	0	0	59.48	141.11	0.00	1.28	3.21	0.00
7	0	0	0	0	0	0	54.10	53.69	0.00	6.97	7.10	0.00
8	0	0	0	0	0	0	48.95	46.60	0.00	7.24	7.10	0.00
9	0	0	0	0	0	0	51.16	87.35	0.00	1.25	2.26	0.00
10	0	0	0	0	0	0	42.67	34.04	0.00	9.61	7.90	0.00
11	488	80	0	-160	975	0	34.19	26.14	0.00	9.94	7.90	0.00
12	0	0	0	0	0	0	33.57	25.21	0.00	1.20	0.94	0.00
13	671	90	0	-180	1343	0	27.00	27.55	0.00	0.01	0.01	0.00
14	0	0	0	0	0	0	27.26	27.54	0.00	0.00	0.00	0.00

Group III

Member	Fx	Fy	Fz	Mx	My	Mz	Wx	Wy	Wz	Tx	Ty	Tz

1	0	0	0	0	0	0	30.96	139	0.00	2.84	13.81	0.00
2	0	0	0	0	0	0	29.85	125	0.00	3.01	13.81	0.00
3	0	0	0	0	0	0	32.98	225	0.00	0.67	5.10	0.00
4	0	0	0	0	0	0	31.59	106	0.00	3.04	11.15	0.00
5	0	0	0	0	0	0	30.35	95	0.00	3.23	11.15	0.00
6	0	0	0	0	0	0	31.94	154	0.00	0.64	3.48	0.00
7	0	0	0	0	0	0	29.30	65	0.00	3.49	8.55	0.00
8	0	0	0	0	0	0	26.82	56	0.00	3.62	8.55	0.00
9	0	0	0	0	0	0	27.97	97	0.00	0.63	2.51	0.00
10	0	0	0	0	0	0	23.78	42	0.00	4.80	9.76	0.00
11	244	80	0	-160	488	0	19.62	33	0.00	4.97	9.76	0.00
12	0	0	0	0	0	0	19.35	31	0.00	0.60	1.16	0.00
13	336	90	0	-180	671	0	17.10	31	0.00	0.00	0.01	0.00
14	0	0	0	0	0	0	17.27	31	0.00	0.00	0.00	0.00

Galloping

Member	Fx	Fy	Fz	Mx	My	Mz	Wx	Wy	Wz	Tx	Ty	Tz
1	0	0	0	0	0	0	0.00	0	0.00	0.00	0.00	0.00
2	0	0	0	0	0	0	0.00	0	0.00	0.00	0.00	0.00
3	0	0	0	0	0	0	0.00	0	0.00	0.00	0.00	0.00
4	0	0	0	0	0	0	0.00	0	0.00	0.00	0.00	0.00
5	0	0	0	0	0	0	0.00	0	0.00	0.00	0.00	0.00
6	0	0	0	0	0	0	0.00	0	0.00	0.00	0.00	0.00
7	0	0	0	0	0	0	0.00	0	0.00	0.00	0.00	0.00
8	0	0	0	0	0	0	0.00	0	0.00	0.00	0.00	0.00
9	0	0	0	0	0	0	0.00	0	0.00	0.00	0.00	0.00
10	0	0	0	0	0	0	0.00	0	0.00	0.00	0.00	0.00
11	0	0	0	0	0	0	0.00	0	0.00	0.00	0.00	0.00
12	0	0	0	0	0	0	0.00	0	0.00	0.00	0.00	0.00
13	0	0	0	0	0	0	0.00	0	0.00	0.00	0.00	0.00
14	0	0	0	0	0	0	0.00	0	0.00	0.00	0.00	0.00

Natural Wind Gust

Member	Fx	Fy	Fz	Mx	My	Mz	Wx	Wy	Wz	Tx	Ty	Tz
1	0	0	0	0	0	0	4.10	0.00	0.00	0.40	0.00	0.00
2	0	0	0	0	0	0	3.89	0.00	0.00	0.42	0.00	0.00
3	0	0	0	0	0	0	4.07	0.00	0.00	0.09	0.00	0.00
4	0	0	0	0	0	0	3.98	0.00	0.00	0.41	0.00	0.00
5	0	0	0	0	0	0	4.08	0.00	0.00	0.47	0.00	0.00
6	0	0	0	0	0	0	4.30	0.00	0.00	0.09	0.00	0.00
7	0	0	0	0	0	0	4.17	0.00	0.00	0.54	0.00	0.00
8	0	0	0	0	0	0	4.29	0.00	0.00	0.64	0.00	0.00
9	0	0	0	0	0	0	4.60	0.00	0.00	0.11	0.00	0.00
10	0	0	0	0	0	0	4.33	0.00	0.00	0.97	0.00	0.00
11	22	0	0	0	45	0	3.89	0.00	0.00	1.13	0.00	0.00
12	0	0	0	0	0	0	3.76	0.00	0.00	0.13	0.00	0.00
13	30	0	0	0	60	0	2.15	0.00	0.00	0.00	0.00	0.00
14	0	0	0	0	0	0	2.15	0.00	0.00	0.00	0.00	0.00

Truck-Induced Gust

Member	Fx	Fy	Fz	Mx	My	Mz	Wx	Wy	Wz	Tx	Ty	Tz
1	0	0	0	0	0	0	0.00	0.00	0.00	0.00	0.00	0.00
2	0	0	0	0	0	0	0.00	0.00	0.00	0.00	0.00	0.00
3	0	0	0	0	0	0	0.00	0.00	0.00	0.00	0.00	0.00
4	0	0	0	0	0	0	0.00	0.00	0.00	0.00	0.00	0.00
5	0	0	0	0	0	0	0.00	0.00	0.00	0.00	0.00	0.00
6	0	0	0	0	0	0	0.00	0.00	0.00	0.00	0.00	0.00
7	0	0	0	0	0	0	0.00	0.00	0.00	0.00	0.00	0.00

8	0	0	0	0	0	0	0.00	0.00	0.00	0.00	0.00	0.00
9	0	0	0	0	0	0	0.00	0.00	0.00	0.00	0.00	0.00
10	0	0	0	0	0	0	0.00	0.00	0.00	0.00	0.00	0.00
11	0	0	0	0	0	0	0.00	0.00	0.00	0.00	0.00	0.00
12	0	0	0	0	0	0	0.00	0.00	0.00	0.00	0.00	0.00
13	0	0	0	0	0	0	0.00	0.00	0.00	0.00	0.00	0.00
14	0	0	0	0	0	0	0.00	0.00	0.00	0.00	0.00	0.00

Basic Wind Pressures and Drag Factors

Wind Direction Angle = 0 Positive X-Axis = 0 degrees

Member	p-II	np-II	tp-II	p-III	np-III	tp-III	p-G	p-NW	np-NW	tp-NW	p-TG	Cd	Cd-NW	Cd-TG
1	74.49	0.00	74.49	37.24	0.00	37.24	0.00	5.22	0.00	5.22	0.00	0.45	0.45	0.45
2	79.05	0.00	79.05	39.52	0.00	39.52	0.00	5.22	0.00	5.22	0.00	0.45	0.47	0.45
3	84.88	0.00	84.88	42.44	0.00	42.44	0.00	5.22	0.00	5.22	0.00	0.45	0.48	0.45
4	89.14	0.00	89.14	44.57	0.00	44.57	0.00	5.22	0.00	5.22	0.00	0.45	0.52	0.45
5	94.78	0.00	94.78	47.39	0.00	47.39	0.00	5.22	0.00	5.22	0.00	0.45	0.59	0.45
6	97.61	0.00	97.61	48.81	0.00	48.81	0.00	5.22	0.00	5.22	0.00	0.45	0.61	0.45
7	100.21	0.00	100.21	50.11	0.00	50.11	0.00	5.22	0.00	5.22	0.00	0.45	0.67	0.45
8	104.09	0.00	104.09	52.04	0.00	52.04	0.00	5.22	0.00	5.22	0.00	0.45	0.79	0.45
9	106.12	0.00	106.12	53.06	0.00	53.06	0.00	5.22	0.00	5.22	0.00	0.45	0.82	0.45
10	108.45	0.00	108.45	54.22	0.00	54.22	0.00	5.22	0.00	5.22	0.00	0.45	0.95	0.45
11	112.15	0.00	112.15	56.07	0.00	56.07	0.00	5.22	0.00	5.22	0.00	0.45	1.10	0.55
12	114.03	0.00	114.03	57.02	0.00	57.02	0.00	5.22	0.00	5.22	0.00	0.45	1.10	0.67
13	115.17	0.00	115.17	57.59	0.00	57.59	0.00	5.22	0.00	5.22	0.00	0.63	1.10	1.10
14	116.27	0.00	116.27	58.14	0.00	58.14	0.00	5.22	0.00	5.22	0.00	0.63	1.10	1.10

Pole - Member Forces (ft & lbs)

Group I

Member	FxiW	FyiW	FziW	MxiW	MyiW	MziW	Fxi	Fyi	Fzi	Mxi	Myi	Mzi	Fxj	Fyj	Fzj	Mxj	Myj	Mzj
1	0	10,265	0	-397	0	0	0	10,265	0	-397	0	0	0	8,396	0	-396	0	0
2	0	8,396	0	-396	0	0	0	8,396	0	-396	0	0	0	6,705	0	-392	0	0
3	0	6,705	0	-392	0	0	0	6,705	0	-392	0	0	0	6,069	0	-391	0	0
4	0	6,069	0	-391	0	0	0	6,069	0	-391	0	0	0	4,811	0	-387	0	0
5	0	4,811	0	-387	0	0	0	4,811	0	-387	0	0	0	3,680	0	-382	0	0
6	0	3,680	0	-382	0	0	0	3,680	0	-382	0	0	0	3,323	0	-381	0	0
7	0	3,323	0	-381	0	0	0	3,323	1	-381	0	0	0	2,564	0	-374	0	0
8	0	2,564	0	-374	0	0	0	2,564	1	-374	0	0	0	1,900	0	-367	0	0
9	0	1,900	0	-367	0	0	0	1,900	1	-367	0	0	0	1,701	1	-366	0	0
10	0	1,701	0	-366	0	0	0	1,701	1	-366	0	0	0	1,060	0	-356	0	0
11	0	1,060	0	-356	0	0	0	1,060	1	-356	0	0	0	552	0	-345	0	0
12	0	472	0	-185	0	0	0	472	1	-185	0	0	0	421	0	-184	0	0
13	0	421	0	-184	0	0	0	421	1	-184	0	0	0	145	0	-180	0	0
14	0	55	0	0	0	0	0	55	0	0	0	0	0	0	0	0	0	0

Group II

Member	FxiW	FyiW	FziW	MxiW	MyiW	MziW	Fxi	Fyi	Fzi	Mxi	Myi	Mzi	Fxj	Fyj	Fzj	Mxj	Myj	Mzj
1	8,261	10,265	0	-359	2,319	617,208	8,393	10,157	0	-328	2,319	617,208	7,479	8,300	0	-327	2,319	502,235
2	7,371	8,396	0	-358	2,318	502,235	7,703	8,092	0	-264	2,319	502,235	6,778	6,437	0	-262	2,319	397,361
3	6,513	6,705	0	-355	2,316	397,361	6,880	6,328	0	-225	2,319	397,361	6,656	5,703	0	-224	2,319	377,059
4	6,325	6,069	0	-354	2,315	377,059	6,738	5,606	0	-191	2,319	377,059	5,842	4,409	0	-188	2,319	295,381
5	5,516	4,811	0	-351	2,312	295,381	5,960	4,248	0	-125	2,319	295,381	5,077	3,198	0	-122	2,319	223,743
6	4,740	3,680	0	-348	2,309	223,743	5,127	3,118	0	-86	2,319	223,743	4,937	2,781	0	-85	2,319	211,165
7	4,590	3,323	0	-348	2,308	211,164	4,989	2,686	0	-41	2,319	211,165	4,133	2,035	0	-38	2,319	150,845
8	3,827	2,564	0	-345	2,304	150,844	4,204	1,883	0	46	2,320	150,845	3,406	1,346	0	48	2,320	100,553
9	3,130	1,900	0	-343	2,301	100,553	3,432	1,276	0	95	2,319	100,553	3,280	1,103	0	95	2,319	93,002
10	3,014	1,701	0	-343	2,301	93,002	3,306	1,024	0	152	2,320	93,002	2,387	567	0	152	2,320	45,235
11	2,213	1,060	0	-343	2,300	45,235	2,408	469	0	249	2,322	45,234	1,641	144	0	250	2,322	11,348

12	1,064	472	0	-182	1,332	11,348	1,152	169	0	184	1,337	11,348	1,072	137	0	184	1,337	9,124
13	996	421	0	-182	1,333	9,125	1,074	121	0	206	1,338	9,124	737	-67	0	208	1,338	67
14	55	55	0	0	0	68	68	37	0	0	0	68	0	0	0	0	0	0
Group III																		
Member	FxiW	FyiW	FziW	MxiW	MyiW	MziW	Fxi	Fyi	Fzi	Mxi	Myi	Mzi	Fxj	Fyj	Fzj	Mxj	Myj	Mzj
1	4,444	11,838	0	-391	1,198	339,892	4,529	11,806	0	-383	1,198	339,892	4,044	9,691	0	-381	1,198	277,792
2	3,975	9,719	0	-390	1,197	277,792	4,190	9,628	0	-363	1,198	277,792	3,693	7,720	0	-360	1,198	220,698
3	3,520	7,801	0	-386	1,196	220,698	3,761	7,687	0	-349	1,198	220,698	3,640	7,008	0	-348	1,198	209,598
4	3,420	7,118	0	-385	1,195	209,598	3,696	6,979	0	-339	1,198	209,598	3,210	5,549	0	-334	1,198	164,757
5	2,990	5,670	0	-381	1,193	164,757	3,293	5,500	0	-316	1,198	164,757	2,807	4,221	0	-310	1,198	125,158
6	2,574	4,368	0	-375	1,190	125,157	2,844	4,197	0	-300	1,198	125,158	2,739	3,813	0	-299	1,198	118,179
7	2,493	3,979	0	-374	1,189	118,179	2,780	3,784	1	-286	1,198	118,179	2,302	2,899	0	-280	1,198	84,570
8	2,082	3,061	0	-368	1,185	84,570	2,361	2,851	1	-256	1,198	84,570	1,907	2,086	0	-249	1,198	56,361
9	1,703	2,256	0	-361	1,180	56,360	1,931	2,064	1	-236	1,198	56,361	1,844	1,850	0	-235	1,198	52,115
10	1,639	2,034	0	-359	1,179	52,114	1,869	1,825	1	-219	1,197	52,115	1,336	1,087	0	-210	1,197	25,221
11	1,197	1,238	0	-351	1,172	25,220	1,360	1,057	1	-184	1,197	25,221	902	485	0	-176	1,197	6,289
12	580	527	0	-183	676	6,289	653	434	0	-80	692	6,289	605	376	0	-79	692	5,031
13	541	463	0	-183	675	5,031	608	371	0	-74	691	5,032	390	92	0	-71	691	45
14	35	62	0	0	0	44	44	56	0	0	0	44	0	0	0	0	0	0
Galloping																		
Member	FxiW	FyiW	FziW	MxiW	MyiW	MziW	Fxi	Fyi	Fzi	Mxi	Myi	Mzi	Fxj	Fyj	Fzj	Mxj	Myj	Mzj
1	0	0	0	0	0	0	0	0	0	0	0	0	0	0	0	0	0	0
2	0	0	0	0	0	0	0	0	0	0	0	0	0	0	0	0	0	0
3	0	0	0	0	0	0	0	0	0	0	0	0	0	0	0	0	0	0
4	0	0	0	0	0	0	0	0	0	0	0	0	0	0	0	0	0	0
5	0	0	0	0	0	0	0	0	0	0	0	0	0	0	0	0	0	0
6	0	0	0	0	0	0	0	0	0	0	0	0	0	0	0	0	0	0
7	0	0	0	0	0	0	0	0	0	0	0	0	0	0	0	0	0	0
8	0	0	0	0	0	0	0	0	0	0	0	0	0	0	0	0	0	0
9	0	0	0	0	0	0	0	0	0	0	0	0	0	0	0	0	0	0
10	0	0	0	0	0	0	0	0	0	0	0	0	0	0	0	0	0	0
11	0	0	0	0	0	0	0	0	0	0	0	0	0	0	0	0	0	0
12	0	0	0	0	0	0	0	0	0	0	0	0	0	0	0	0	0	0
13	0	0	0	0	0	0	0	0	0	0	0	0	0	0	0	0	0	0
14	0	0	0	0	0	0	0	0	0	0	0	0	0	0	0	0	0	0
Natural Wind Gust																		
Member	FxiW	FyiW	FziW	MxiW	MyiW	MziW	Fxi	Fyi	Fzi	Mxi	Myi	Mzi	Fxj	Fyj	Fzj	Mxj	Myj	Mzj
1	628	0	0	0	105	45,139	628	0	0	0	105	45,139	566	0	0	0	105	36,488
2	566	0	0	0	105	36,488	566	0	0	0	105	36,488	507	0	0	0	105	28,719
3	507	0	0	0	105	28,719	507	0	0	0	105	28,719	494	0	0	0	105	27,218
4	494	0	0	0	105	27,218	494	0	0	0	105	27,218	440	0	0	0	105	21,153
5	440	0	0	0	105	21,153	440	0	0	0	105	21,153	384	0	0	0	105	15,808
6	384	0	0	0	105	15,808	384	0	0	0	105	15,808	373	0	0	0	105	14,862
7	373	0	0	0	105	14,862	373	0	0	0	105	14,862	314	0	0	0	105	10,320
8	314	0	0	0	105	10,320	314	0	0	0	105	10,320	253	0	0	0	105	6,574
9	253	0	0	0	105	6,574	253	0	0	0	105	6,574	242	0	0	0	105	6,017
10	242	0	0	0	105	6,017	242	0	0	0	105	6,017	161	0	0	0	105	2,635
11	161	0	0	0	105	2,635	161	0	0	0	105	2,635	86	0	0	0	105	576
12	64	0	0	0	60	576	64	0	0	0	60	576	56	0	0	0	60	457
13	56	0	0	0	60	457	56	0	0	0	60	457	34	0	0	0	60	4
14	4	0	0	0	0	4	4	0	0	0	0	4	0	0	0	0	0	0
Truck-Induced Gust																		
Member	FxiW	FyiW	FziW	MxiW	MyiW	MziW	Fxi	Fyi	Fzi	Mxi	Myi	Mzi	Fxj	Fyj	Fzj	Mxj	Myj	Mzj
1	0	0	0	0	0	0	0	0	0	0	0	0	0	0	0	0	0	0
2	0	0	0	0	0	0	0	0	0	0	0	0	0	0	0	0	0	0

3	0	0	0	0	0	0	0	0	0	0	0	0	0	0	0	0	0	0
4	0	0	0	0	0	0	0	0	0	0	0	0	0	0	0	0	0	0
5	0	0	0	0	0	0	0	0	0	0	0	0	0	0	0	0	0	0
6	0	0	0	0	0	0	0	0	0	0	0	0	0	0	0	0	0	0
7	0	0	0	0	0	0	0	0	0	0	0	0	0	0	0	0	0	0
8	0	0	0	0	0	0	0	0	0	0	0	0	0	0	0	0	0	0
9	0	0	0	0	0	0	0	0	0	0	0	0	0	0	0	0	0	0
10	0	0	0	0	0	0	0	0	0	0	0	0	0	0	0	0	0	0
11	0	0	0	0	0	0	0	0	0	0	0	0	0	0	0	0	0	0
12	0	0	0	0	0	0	0	0	0	0	0	0	0	0	0	0	0	0
13	0	0	0	0	0	0	0	0	0	0	0	0	0	0	0	0	0	0
14	0	0	0	0	0	0	0	0	0	0	0	0	0	0	0	0	0	0

Pole - Member Stresses (psi)

Group I

Member	fai	fvi	fbi	Fai	Fvi	Fbi	CSRi	faj	fvj	fbj	Faj	Fvj	Fbj	CSRj
1	259	0	21	33,000	18,150	36,300	0.008	233	0	26	33,000	18,150	36,300	0.008
2	233	0	26	33,000	18,150	36,300	0.008	206	0	32	33,000	18,150	36,300	0.007
3	106	0	16	33,000	18,150	36,300	0.004	99	0	17	33,000	18,150	36,300	0.003
4	203	0	33	33,000	18,150	36,300	0.007	178	0	40	33,000	18,150	36,300	0.007
5	178	0	40	33,000	18,150	36,300	0.007	152	0	49	33,000	18,150	36,300	0.006
6	87	0	27	33,000	18,150	36,300	0.003	80	0	29	33,000	18,150	36,300	0.003
7	186	0	64	33,000	18,150	36,300	0.007	163	0	81	33,000	18,150	36,300	0.007
8	163	0	81	33,000	18,150	36,300	0.007	139	0	106	33,000	18,150	36,300	0.007
9	72	0	54	33,000	18,150	36,300	0.004	66	0	56	33,000	18,150	36,300	0.004
10	138	0	114	33,000	18,150	36,300	0.007	106	0	168	33,000	18,150	36,300	0.008
11	106	0	168	33,000	18,150	36,300	0.008	72	0	276	33,000	18,150	36,300	0.010
12	61	0	148	33,000	18,150	36,300	0.006	57	0	159	33,000	18,150	36,300	0.006
13	52	0	286	21,000	11,550	23,100	0.015	18	0	279	21,000	11,550	23,100	0.013
14	7	0	0	21,000	11,550	23,100	0.000	0	0	0	21,000	11,550	23,100	0.000

Group II

Member	fai	fvi	fbi	Fai	Fvi	Fbi	CSRi	faj	fvj	fbj	Faj	Fvj	Fbj	CSRj
1	256	486	33,289	33,000	18,150	36,300	0.926	230	490	32,746	33,000	18,150	36,300	0.910
2	224	503	32,746	33,000	18,150	36,300	0.910	198	510	31,948	33,000	18,150	36,300	0.887
3	100	265	16,036	33,000	18,150	36,300	0.445	93	265	15,917	33,000	18,150	36,300	0.442
4	188	549	31,866	33,000	18,150	36,300	0.884	163	553	30,526	33,000	18,150	36,300	0.847
5	157	561	30,526	33,000	18,150	36,300	0.847	132	570	28,919	33,000	18,150	36,300	0.802
6	74	325	16,086	33,000	18,150	36,300	0.446	67	325	15,880	33,000	18,150	36,300	0.440
7	150	755	35,702	33,000	18,150	36,300	0.990	129	775	32,690	33,000	18,150	36,300	0.906
8	119	784	32,690	33,000	18,150	36,300	0.906	98	831	28,933	33,000	18,150	36,300	0.802
9	48	430	14,663	33,000	18,150	36,300	0.406	43	433	14,273	33,000	18,150	36,300	0.395
10	83	897	28,875	33,000	18,150	36,300	0.800	57	1,024	21,320	33,000	18,150	36,300	0.592
11	47	1,028	21,320	33,000	18,150	36,300	0.592	19	1,355	9,072	33,000	18,150	36,300	0.256
12	22	834	9,071	33,000	18,150	36,300	0.253	19	864	7,846	33,000	18,150	36,300	0.219
13	15	1,302	14,140	21,000	11,550	23,100	0.626	-8	1,220	338	21,000	11,550	23,100	0.026
14	5	17	106	21,000	11,550	23,100	0.005	0	0	0	21,000	11,550	23,100	0.000

Group III

Member	fai	fvi	fbi	Fai	Fvi	Fbi	CSRi	faj	fvj	fbj	Faj	Fvj	Fbj	CSRj
1	298	261	18,332	33,000	18,150	36,300	0.514	269	263	18,112	33,000	18,150	36,300	0.507
2	267	271	18,112	33,000	18,150	36,300	0.507	238	275	17,744	33,000	18,150	36,300	0.496
3	122	144	8,907	33,000	18,150	36,300	0.249	114	143	8,848	33,000	18,150	36,300	0.247
4	234	298	17,714	33,000	18,150	36,300	0.495	205	300	17,027	33,000	18,150	36,300	0.476
5	204	306	17,027	33,000	18,150	36,300	0.476	175	310	16,177	33,000	18,150	36,300	0.451
6	99	177	8,998	33,000	18,150	36,300	0.251	92	177	8,887	33,000	18,150	36,300	0.248
7	212	412	19,981	33,000	18,150	36,300	0.557	184	422	18,327	33,000	18,150	36,300	0.511

8	181	429	18,327	33,000	18,150	36,300	0.511	152	451	16,217	33,000	18,150	36,300	0.452
9	78	234	8,219	33,000	18,150	36,300	0.229	72	236	7,998	33,000	18,150	36,300	0.223
10	148	489	16,181	33,000	18,150	36,300	0.451	109	549	11,887	33,000	18,150	36,300	0.332
11	106	554	11,887	33,000	18,150	36,300	0.332	63	713	5,029	33,000	18,150	36,300	0.142
12	56	446	5,027	33,000	18,150	36,300	0.141	51	461	4,326	33,000	18,150	36,300	0.121
13	46	686	7,797	21,000	11,550	23,100	0.343	11	632	130	21,000	11,550	23,100	0.009
14	7	11	68	21,000	11,550	23,100	0.003	0	0	0	21,000	11,550	23,100	0.000

Galloping							Natural Wind Gust						Truck-Induced Gust					
Member	fbi	Fbi	Ratio i	fbj	Fbj	Ratio j	fbi	Fbi	Ratio i	fbj	Fbj	Ratio j	fbi	Fbi	Ratio i	fbj	Fbj	Ratio j
1	0	12,000	0.000	0	12,000	0.000	2,435	12,000	0.203	2,379	12,000	0.198	0	12,000	0.000	0	12,000	0.000
2	0	12,000	0.000	0	12,000	0.000	2,379	12,000	0.198	2,309	12,000	0.192	0	12,000	0.000	0	12,000	0.000
3	0	12,000	0.000	0	12,000	0.000	1,159	12,000	0.097	1,149	12,000	0.096	0	12,000	0.000	0	12,000	0.000
4	0	12,000	0.000	0	12,000	0.000	2,300	12,000	0.192	2,186	12,000	0.182	0	12,000	0.000	0	12,000	0.000
5	0	12,000	0.000	0	12,000	0.000	2,186	12,000	0.182	2,043	12,000	0.170	0	12,000	0.000	0	12,000	0.000
6	0	12,000	0.000	0	12,000	0.000	1,137	12,000	0.095	1,118	12,000	0.093	0	12,000	0.000	0	12,000	0.000
7	0	12,000	0.000	0	12,000	0.000	2,513	12,000	0.209	2,236	12,000	0.186	0	12,000	0.000	0	12,000	0.000
8	0	12,000	0.000	0	12,000	0.000	2,236	12,000	0.186	1,892	12,000	0.158	0	12,000	0.000	0	12,000	0.000
9	0	12,000	0.000	0	12,000	0.000	959	12,000	0.080	923	12,000	0.077	0	12,000	0.000	0	12,000	0.000
10	0	12,000	0.000	0	12,000	0.000	1,868	12,000	0.156	1,242	12,000	0.103	0	12,000	0.000	0	12,000	0.000
11	0	12,000	0.000	0	12,000	0.000	1,242	12,000	0.103	461	12,000	0.038	0	12,000	0.000	0	12,000	0.000
12	0	12,000	0.000	0	12,000	0.000	461	12,000	0.038	393	12,000	0.033	0	12,000	0.000	0	12,000	0.000
13	0	12,000	0.000	0	12,000	0.000	708	12,000	0.059	7	12,000	0.001	0	12,000	0.000	0	12,000	0.000
14	0	12,000	0.000	0	12,000	0.000	7	12,000	0.001	0	12,000	0.000	0	12,000	0.000	0	12,000	0.000

Pole Base - Connection Stresses (psi) - Strength Design

	Group I	Group II	Group III
Bolt Stress			
Applied Tensile	16	25,339	13,954
Applied Shear	0	260	139
Allowable Tensile	27,500	27,500	27,500
Allowable Shear	16,500	16,500	16,500
Bolt Ratio	0.001	0.922	0.507
Base Plate Stress			
Applied Bending	15	24,044	13,241
Allowable Bending	27,000	27,000	27,000
Ratio	0.001	0.891	0.490

Pole Base - Connection Stresses (psi) - Fatigue Design

	Galloping	Natural Wind	Truck Gust
Ex. 8 - Detail 5 (Connection Bolts)			
Bolt SR	0	1,853	0
Bolt CAFL	7,000	7,000	7,000
Ratio	0.000	0.265	0.000
Ex. 5 - Detail 11 (Full Weld Backup - Full Pen.)			
Tube SR	0	2,435	0
Tube CAFL	4,500	4,500	4,500
Ratio	0.000	0.541	0.000

UNION METAL CORPORATION
1432 Maple Avenue NE, Canton, Ohio 44705
Phone:330-456-7653 Fax: 330-456-0196
Mast Arm and Pole Design Program - Version 2.0.1 - April 4, 2005
Engineer: David N. Fritz, PE
Phone: 330-458-5266
Fax: 330-458-5276
Email: fritz@unionmetal.com
Computer File: C:\Mast Arm Data\DadeSchoolAntenna-50.dat
6/24/2005 10:55:59 AM

UMC Reference No.
Structure Description: ROUND TAPERED STEEL SELF SUPPORT ANTENNA STRUCTURE
Project Description: MIAMI DADE COUNTY PUBLIC SCHOOLS
Design Code: ASCE 7-98
Basic Wind Speed: 50 mph
Wind Pressure Method: ASCE 7-98
Gust Effect Factor: 1.30
Allowable Stress Increase for Wind: 1.00
Ice Loading: 3.0 psf

Structure Design Life: N/A yrs
Wind Importance Factor: 1.15
Wind Exposure: Alpha: 9.5 Zg: 900 ft Zmin: 16.4 ft

Structure Identification: 125' POLE HEIGHT - 137' HEIGHT TO TOP OF TENON (DEFLECTION CHECK)

Pole - Structure Data
Number of Tubes: 5
Total Pole Length: 137.00 ft
Tube 1: 0.563 in wall x 23.00 in OD x18.52 in OD x 32.00 ft length
Tube 2: 0.500 in wall x 19.94 in OD x 15.53 in OD x 31.50 ft length w/ 3.00 ft Slip Joint Splice
Tube 3: 0.358 in wall x 16.60 in OD x 12.23 in OD x 31.25 ft length w/ 2.50 ft Slip Joint Splice
Tube 4: 0.313 in wall x 13.17 in OD x 7.85 in OD x 38.00 ft length w/ 2.25 ft Slip Joint Splice
Tube 5: 0.674 in wall x 4.50 in OD x 4.50 in OD x 12.00 ft length (Tenon)
Pole Signal Loads (lbs)(ft)

No.	Height	Orientation	Weight	Front Area	Side Area	Ice Area	Horz. Cd	H. Offset
1	135	0	90	12.57	7.41	0	0.46	2
2	123	0	30	1.9	1.9	0	1.21	2
3	123	0	20	0.34	0.5	0	1.21	2
4	123	0	30	1.3	1.3	0	1.21	2

Pole - Member Deflections (in & Deg)

Group I							Group II						Group III					
Member	Disp-X	Disp-Y	Disp-Z	Ang-X	Ang-Y	Ang-Z	Disp-X	Disp-Y	Disp-Z	Ang-X	Ang-Y	Ang-Z	Disp-X	Disp-Y	Disp-Z	Ang-X	Ang-Y	Ang-Z
1	0.00	0.00	0.00	0.00	0.00	0.00	0.00	0.00	0.00	0.00	0.00	0.01	0.00	0.00	0.00	0.00	0.00	0.01
2	0.00	0.00	0.00	0.00	0.00	0.00	0.00	0.00	0.00	0.00	0.00	0.02	0.01	0.00	0.00	0.00	0.00	0.02
3	0.00	0.00	0.00	0.00	0.00	0.00	0.01	0.00	0.00	0.00	0.00	0.03	0.01	0.00	0.00	0.00	0.00	0.04
4	0.00	0.00	0.00	0.00	0.00	0.00	0.02	0.00	0.00	0.00	0.00	0.04	0.02	0.00	0.00	0.00	0.00	0.05
5	0.00	0.00	0.00	0.00	0.00	0.00	0.03	0.00	0.00	0.00	0.00	0.05	0.03	0.00	0.00	0.00	0.00	0.06
6	0.00	0.00	0.00	0.00	0.00	0.00	0.04	0.00	0.00	0.00	0.00	0.06	0.05	0.00	0.00	0.00	0.00	0.08
7	0.00	0.00	0.00	0.00	0.00	0.00	0.06	0.00	0.00	0.00	0.00	0.08	0.06	0.00	0.00	0.00	0.00	0.09
8	0.00	0.00	0.00	0.00	0.00	0.00	0.07	0.00	0.00	0.00	0.00	0.09	0.08	0.00	0.00	0.00	0.00	0.10
9	0.00	0.00	0.00	0.00	0.00	0.00	0.09	0.00	0.00	0.00	0.00	0.10	0.11	0.00	0.00	0.00	0.00	0.11
10	0.00	0.00	0.00	0.00	0.00	0.00	0.11	0.00	0.00	0.00	0.00	0.11	0.13	0.00	0.00	0.00	0.00	0.13

11	0.00	0.00	0.00	0.00	0.00	0.00	0.14	0.00	0.00	0.00	0.00	0.12	0.16	0.00	0.00	0.00	0.00	0.14
12	0.00	0.00	0.00	0.00	0.00	0.00	0.16	0.00	0.00	0.00	0.00	0.13	0.19	0.00	0.00	0.00	0.00	0.15
13	0.00	0.00	0.00	0.00	0.00	0.00	0.19	0.00	0.00	0.00	0.00	0.14	0.22	0.00	0.00	0.00	0.00	0.17
14	0.00	0.00	0.00	0.00	0.00	0.00	0.22	0.00	0.00	0.00	0.00	0.15	0.26	0.00	0.00	0.00	0.00	0.18
15	0.00	0.00	0.00	0.00	0.00	0.00	0.26	0.00	0.00	0.00	0.00	0.17	0.30	0.00	0.00	0.00	0.00	0.19
16	0.00	0.00	0.00	0.00	0.00	0.00	0.29	0.00	0.00	0.00	0.00	0.18	0.34	0.00	0.00	0.00	0.00	0.21
17	0.00	0.00	0.00	0.00	0.00	0.00	0.33	0.00	0.00	0.00	0.00	0.19	0.38	0.00	0.00	0.00	0.00	0.22
18	0.00	0.00	0.00	0.00	0.00	0.00	0.37	0.00	0.00	0.00	0.00	0.20	0.43	0.00	0.00	0.00	0.00	0.23
19	0.00	0.00	0.00	0.00	0.00	0.00	0.42	0.00	0.00	0.00	0.00	0.21	0.48	0.00	0.00	0.00	0.00	0.25
20	0.00	0.00	0.00	0.00	0.00	0.00	0.46	0.00	0.00	0.00	0.00	0.23	0.54	0.00	0.00	0.00	0.00	0.26
21	0.00	0.00	0.00	0.00	0.00	0.00	0.51	0.00	0.00	0.00	0.00	0.24	0.59	0.00	0.00	0.00	0.00	0.27
22	0.00	0.00	0.00	0.00	0.00	0.00	0.56	0.00	0.00	0.00	0.00	0.25	0.65	0.00	0.00	0.00	0.00	0.29
23	0.00	0.00	0.00	0.00	0.00	0.00	0.62	0.00	0.00	0.00	0.00	0.26	0.71	0.00	0.00	0.00	0.00	0.30
24	0.00	0.00	0.00	0.00	0.00	0.00	0.67	0.00	0.00	0.00	0.00	0.27	0.78	0.00	0.00	0.00	0.00	0.32
25	0.00	0.00	0.00	0.00	0.00	0.00	0.73	0.00	0.00	0.00	0.00	0.29	0.85	0.00	0.00	0.00	0.00	0.33
26	0.00	0.00	0.00	0.00	0.00	0.00	0.79	0.00	0.00	0.00	0.00	0.30	0.92	0.00	0.00	0.00	0.00	0.35
27	0.00	0.00	0.00	0.00	0.00	0.00	0.86	0.00	0.00	0.00	0.00	0.31	0.99	0.00	0.00	0.00	0.00	0.36
28	0.00	0.00	0.00	0.00	0.00	0.00	0.92	0.00	0.00	0.00	0.00	0.32	1.07	0.00	0.00	0.00	0.00	0.37
29	0.00	0.00	0.00	0.00	0.00	0.00	0.99	0.00	0.00	0.00	0.00	0.34	1.15	0.00	0.00	0.00	0.00	0.39
30	0.00	0.00	0.00	0.00	0.00	0.00	1.06	0.00	0.00	0.00	0.00	0.34	1.23	0.00	0.00	0.00	0.00	0.40
31	0.00	0.00	0.01	0.00	0.00	0.00	1.14	0.00	0.01	0.00	0.00	0.35	1.31	0.00	0.01	0.00	0.00	0.40
32	0.00	0.00	0.01	0.00	0.00	0.00	1.21	0.00	0.01	0.00	0.00	0.36	1.40	0.00	0.01	0.00	0.00	0.41
33	0.00	0.00	0.01	0.00	0.00	0.00	1.29	0.00	0.01	0.00	0.00	0.37	1.49	0.00	0.01	0.00	0.00	0.42
34	0.00	0.00	0.01	0.00	0.00	0.00	1.36	0.00	0.01	0.00	0.00	0.38	1.58	0.00	0.01	0.00	0.00	0.44
35	0.00	0.00	0.01	0.00	0.00	0.00	1.45	0.00	0.01	0.00	0.00	0.39	1.67	0.00	0.01	0.00	0.00	0.45
36	0.00	0.00	0.01	0.00	0.00	0.00	1.53	0.00	0.01	0.00	0.00	0.41	1.77	0.00	0.01	0.00	0.00	0.47
37	0.00	0.00	0.01	0.00	0.00	0.00	1.62	0.00	0.01	0.00	0.00	0.42	1.86	0.00	0.01	0.00	0.00	0.48
38	0.00	0.00	0.01	0.00	0.00	0.00	1.71	0.00	0.01	0.00	0.00	0.43	1.97	0.00	0.01	0.00	0.00	0.50
39	0.00	0.00	0.01	0.00	0.00	0.00	1.80	0.00	0.01	0.00	0.00	0.44	2.07	0.00	0.01	0.00	0.00	0.51
40	0.00	0.00	0.01	0.00	0.00	0.00	1.89	0.00	0.01	0.00	0.00	0.46	2.18	0.00	0.01	0.00	0.00	0.53
41	0.00	0.00	0.01	0.00	0.00	0.00	1.99	0.00	0.01	0.00	0.00	0.47	2.29	0.00	0.01	0.00	0.00	0.54
42	0.00	0.00	0.01	0.00	0.00	0.00	2.09	0.00	0.01	0.00	0.00	0.48	2.41	0.00	0.01	0.00	0.00	0.56
43	0.00	0.00	0.01	0.00	0.00	0.00	2.19	0.00	0.01	0.00	0.00	0.50	2.53	0.00	0.01	0.00	0.00	0.57
44	0.00	0.00	0.01	0.00	0.00	0.00	2.30	0.00	0.01	0.00	0.00	0.51	2.65	0.00	0.01	0.00	0.00	0.59
45	0.00	0.00	0.01	0.00	0.00	0.00	2.41	0.00	0.01	0.00	0.00	0.52	2.77	0.00	0.01	0.00	0.00	0.60
46	0.00	0.00	0.01	0.00	0.00	0.00	2.52	0.00	0.01	0.00	0.00	0.54	2.90	0.00	0.01	0.00	0.00	0.62
47	0.00	0.00	0.01	0.00	0.00	0.00	2.63	0.00	0.01	0.00	0.00	0.55	3.03	0.00	0.01	0.00	0.00	0.63
48	0.00	0.00	0.01	0.00	0.00	0.00	2.75	0.00	0.01	0.00	0.00	0.56	3.16	0.00	0.01	0.00	0.00	0.65
49	0.00	0.00	0.01	0.00	0.00	0.00	2.87	0.00	0.01	0.00	0.00	0.58	3.30	0.00	0.01	0.00	0.00	0.66
50	0.00	0.00	0.02	0.00	0.00	0.00	2.99	0.00	0.02	0.00	0.00	0.59	3.44	0.00	0.02	0.00	0.00	0.68
51	0.00	0.00	0.02	0.00	0.00	0.00	3.11	0.00	0.02	0.00	0.00	0.60	3.58	0.00	0.02	0.00	0.00	0.69
52	0.00	0.00	0.02	0.00	0.00	0.00	3.24	0.00	0.02	0.00	0.00	0.62	3.73	0.00	0.02	0.00	0.00	0.71
53	0.00	0.00	0.02	0.00	0.00	0.00	3.37	0.00	0.02	0.00	0.00	0.63	3.88	0.00	0.02	0.00	0.00	0.72
54	0.00	0.00	0.02	0.00	0.00	0.00	3.51	0.00	0.02	0.00	0.00	0.65	4.03	0.00	0.02	0.00	0.00	0.74
55	0.00	0.00	0.02	0.00	0.00	0.00	3.64	0.00	0.02	0.00	0.00	0.66	4.19	0.00	0.02	0.00	0.00	0.76
56	0.00	0.00	0.02	0.00	0.00	0.00	3.78	0.00	0.02	0.00	0.00	0.67	4.35	0.00	0.02	0.00	0.00	0.77
57	0.00	0.00	0.02	0.00	0.00	0.00	3.93	0.00	0.02	0.00	0.00	0.69	4.51	0.00	0.02	0.00	0.00	0.79
58	0.00	0.00	0.02	0.00	0.00	0.00	4.07	0.00	0.02	0.00	0.00	0.70	4.68	0.00	0.02	0.00	0.00	0.80
59	0.00	0.00	0.02	0.00	0.00	0.00	4.20	0.00	0.02	0.00	0.00	0.71	4.82	0.00	0.02	0.00	0.00	0.81
60	0.00	0.00	0.02	0.00	0.00	0.00	4.32	0.00	0.02	0.00	0.00	0.72	4.96	0.00	0.02	0.00	0.00	0.82
61	0.00	0.00	0.02	0.00	0.00	0.00	4.45	0.00	0.02	0.00	0.00	0.72	5.10	0.00	0.02	0.00	0.00	0.83
62	0.00	0.00	0.03	0.00	0.00	0.00	4.60	0.00	0.03	0.00	0.00	0.74	5.28	0.00	0.03	0.00	0.00	0.84
63	0.00	0.00	0.03	-0.01	0.00	0.00	4.75	0.00	0.03	-0.01	0.00	0.76	5.45	0.00	0.03	-0.01	0.00	0.86
64	0.00	0.00	0.03	-0.01	0.00	0.00	4.91	0.00	0.03	-0.01	0.00	0.77	5.63	0.00	0.03	-0.01	0.00	0.88
65	0.00	0.00	0.03	-0.01	0.00	0.00	5.07	0.00	0.03	-0.01	0.00	0.79	5.81	0.00	0.03	-0.01	0.00	0.90

66	0.00	0.00	0.03	-0.01	0.00	0.00	5.23	0.00	0.03	-0.01	0.00	0.81	6.00	0.00	0.03	-0.01	0.00	0.92
67	0.00	0.00	0.03	-0.01	0.00	0.00	5.40	0.00	0.03	-0.01	0.00	0.82	6.19	0.00	0.03	-0.01	0.00	0.94
68	0.00	0.00	0.03	-0.01	0.00	0.00	5.57	0.00	0.03	-0.01	0.00	0.84	6.39	0.00	0.03	-0.01	0.00	0.96
69	0.00	0.00	0.03	-0.01	0.00	0.00	5.75	0.00	0.03	-0.01	0.00	0.86	6.59	0.00	0.03	-0.01	0.00	0.98
70	0.00	0.00	0.03	-0.01	0.00	0.00	5.92	0.00	0.03	-0.01	0.00	0.88	6.79	0.00	0.04	-0.01	0.00	1.00
71	0.00	0.00	0.04	-0.01	0.00	0.00	6.11	0.00	0.04	-0.01	0.00	0.89	7.00	0.00	0.04	-0.01	0.00	1.02
72	0.00	0.00	0.04	-0.01	0.00	0.00	6.29	0.00	0.04	-0.01	0.00	0.91	7.21	0.00	0.04	-0.01	0.00	1.04
73	0.00	0.00	0.04	-0.01	0.00	0.00	6.48	0.00	0.04	-0.01	0.00	0.93	7.42	0.00	0.04	-0.01	0.00	1.06
74	0.00	0.00	0.04	-0.01	0.00	0.00	6.67	0.00	0.04	-0.01	0.00	0.95	7.64	0.00	0.04	-0.01	0.00	1.07
75	0.00	0.00	0.04	-0.01	0.00	0.00	6.87	0.00	0.04	-0.01	0.00	0.96	7.86	0.00	0.04	-0.01	0.00	1.09
76	0.00	0.00	0.04	-0.01	0.00	0.00	7.07	0.00	0.04	-0.01	0.00	0.98	8.09	0.00	0.04	-0.01	0.00	1.11
77	0.00	0.00	0.05	-0.01	0.00	0.00	7.27	0.00	0.04	-0.01	0.00	1.00	8.32	0.00	0.05	-0.01	0.00	1.13
78	0.00	0.00	0.05	-0.01	0.00	0.00	7.48	0.00	0.05	-0.01	0.00	1.01	8.56	0.00	0.05	-0.01	0.00	1.15
79	0.00	0.00	0.05	-0.01	0.00	0.00	7.69	0.00	0.05	-0.01	0.00	1.03	8.80	0.00	0.05	-0.01	0.00	1.17
80	0.00	0.00	0.05	-0.01	0.00	0.00	7.90	0.00	0.05	-0.01	0.00	1.05	9.04	0.00	0.05	-0.01	0.00	1.19
81	0.00	0.00	0.05	-0.01	0.00	0.00	8.12	0.00	0.05	-0.01	0.00	1.07	9.29	0.00	0.05	-0.01	0.00	1.21
82	0.00	0.00	0.05	-0.01	0.00	0.00	8.34	0.00	0.05	-0.01	0.00	1.09	9.54	0.00	0.05	-0.01	0.00	1.23
83	0.00	0.00	0.06	-0.01	0.00	0.00	8.57	0.00	0.06	-0.01	0.00	1.10	9.79	0.00	0.06	-0.01	0.00	1.25
84	0.00	0.00	0.06	-0.01	0.00	0.00	8.79	0.00	0.06	-0.01	0.00	1.12	10.05	0.00	0.06	-0.01	0.00	1.27
85	0.00	0.00	0.06	-0.01	0.00	0.00	9.03	0.00	0.06	-0.01	0.00	1.14	10.31	0.00	0.06	-0.01	0.00	1.29
86	0.00	0.00	0.06	-0.01	0.00	0.00	9.26	0.00	0.06	-0.01	0.00	1.16	10.58	0.00	0.06	-0.01	0.00	1.31
87	0.00	0.00	0.07	-0.01	0.00	0.00	9.50	0.00	0.06	-0.01	0.00	1.17	10.85	0.00	0.07	-0.01	0.00	1.33
88	0.00	0.00	0.07	-0.01	0.00	0.00	9.74	0.00	0.07	-0.01	0.00	1.19	11.13	0.00	0.07	-0.01	0.00	1.35
89	0.00	0.00	0.07	-0.01	0.00	0.00	9.93	0.00	0.07	-0.01	0.00	1.20	11.34	0.00	0.07	-0.01	0.00	1.36
90	0.00	0.00	0.07	-0.01	0.00	0.00	10.12	0.00	0.07	-0.01	0.00	1.20	11.55	0.00	0.07	-0.01	0.00	1.36
91	0.00	0.00	0.07	-0.01	0.00	0.00	10.31	0.00	0.07	-0.01	0.00	1.21	11.77	0.00	0.07	-0.01	0.00	1.37
92	0.00	0.00	0.08	-0.01	0.00	0.00	10.56	0.00	0.08	-0.01	0.00	1.23	12.05	0.00	0.08	-0.01	0.00	1.39
93	0.00	0.00	0.08	-0.01	0.00	0.00	10.82	0.00	0.08	-0.01	0.00	1.24	12.34	0.00	0.08	-0.01	0.00	1.41
94	0.00	0.00	0.08	-0.01	0.00	0.00	11.08	0.00	0.08	-0.01	0.00	1.26	12.64	0.00	0.08	-0.01	0.00	1.43
95	0.00	0.00	0.08	-0.01	0.00	0.00	11.34	0.00	0.08	-0.01	0.00	1.28	12.94	0.00	0.08	-0.01	0.00	1.44
96	0.00	0.00	0.09	-0.01	0.00	0.00	11.61	0.00	0.09	-0.01	0.00	1.29	13.24	0.00	0.09	-0.01	0.00	1.46
97	0.00	0.00	0.09	-0.01	0.00	0.00	11.88	0.00	0.09	-0.01	0.00	1.31	13.55	0.00	0.09	-0.01	0.00	1.48
98	0.00	0.00	0.09	-0.02	0.00	0.00	12.16	0.00	0.09	-0.02	0.00	1.33	13.86	0.00	0.09	-0.02	0.00	1.50
99	0.00	0.00	0.10	-0.02	0.00	0.00	12.43	0.00	0.10	-0.02	0.00	1.34	14.17	0.00	0.10	-0.02	0.00	1.52
100	0.00	0.00	0.10	-0.02	0.00	0.00	12.72	0.00	0.10	-0.02	0.00	1.36	14.49	0.00	0.10	-0.02	0.00	1.54
101	0.00	0.00	0.10	-0.02	0.00	0.00	13.00	0.00	0.10	-0.02	0.00	1.38	14.81	0.00	0.10	-0.02	0.00	1.55
102	0.00	0.00	0.11	-0.02	0.00	0.00	13.29	0.00	0.11	-0.02	0.00	1.39	15.13	0.00	0.11	-0.02	0.00	1.57
103	0.00	0.00	0.11	-0.02	0.00	0.00	13.58	0.00	0.11	-0.02	0.00	1.41	15.46	0.00	0.11	-0.02	0.00	1.59
104	0.00	0.00	0.11	-0.02	0.00	0.00	13.87	0.00	0.11	-0.02	0.00	1.42	15.79	0.00	0.12	-0.02	0.00	1.61
105	0.00	0.00	0.12	-0.02	0.00	0.00	14.17	0.00	0.12	-0.02	0.00	1.44	16.13	0.00	0.12	-0.02	0.00	1.62
106	0.00	0.00	0.12	-0.02	0.00	0.00	14.47	0.00	0.12	-0.02	0.00	1.45	16.47	0.00	0.12	-0.02	0.00	1.64
107	0.00	0.00	0.13	-0.02	0.00	0.00	14.78	0.00	0.13	-0.02	0.00	1.47	16.81	0.00	0.13	-0.02	0.00	1.66
108	0.00	0.00	0.13	-0.02	0.00	0.00	15.08	0.00	0.13	-0.02	0.00	1.48	17.16	0.00	0.13	-0.02	0.00	1.67
109	0.00	0.00	0.14	-0.02	0.00	0.00	15.39	0.00	0.14	-0.02	0.00	1.50	17.51	0.00	0.14	-0.02	0.00	1.69
110	0.00	0.00	0.14	-0.02	0.00	0.00	15.71	0.00	0.14	-0.02	0.00	1.51	17.86	0.00	0.14	-0.02	0.00	1.70
111	0.00	0.00	0.15	-0.02	0.00	0.00	16.02	0.00	0.14	-0.02	0.00	1.53	18.21	0.00	0.15	-0.02	0.00	1.72
112	0.00	0.00	0.15	-0.02	0.00	0.00	16.34	0.00	0.15	-0.02	0.00	1.54	18.57	0.00	0.15	-0.02	0.00	1.73
113	0.00	0.00	0.16	-0.03	0.00	0.00	16.66	0.00	0.15	-0.03	0.00	1.55	18.93	0.00	0.16	-0.03	0.00	1.75
114	0.00	0.00	0.16	-0.03	0.00	0.00	16.99	0.00	0.16	-0.03	0.00	1.57	19.30	0.00	0.16	-0.03	0.00	1.76
115	0.00	0.00	0.17	-0.03	0.00	0.00	17.31	0.00	0.17	-0.03	0.00	1.58	19.67	0.00	0.17	-0.03	0.00	1.78
116	0.00	0.00	0.17	-0.03	0.00	0.00	17.64	0.00	0.17	-0.03	0.00	1.59	20.04	0.00	0.17	-0.03	0.00	1.79
117	0.00	0.00	0.18	-0.03	0.00	0.00	17.98	0.00	0.18	-0.03	0.00	1.60	20.41	0.00	0.18	-0.03	0.00	1.80
118	0.00	0.00	0.19	-0.03	0.00	0.00	18.31	0.00	0.18	-0.03	0.00	1.62	20.79	0.00	0.19	-0.03	0.00	1.81
119	0.00	0.00	0.19	-0.03	0.00	0.00	18.65	0.00	0.19	-0.03	0.00	1.63	21.17	0.00	0.19	-0.03	0.00	1.83
120	0.00	0.00	0.20	-0.03	0.00	0.00	18.99	0.00	0.20	-0.03	0.00	1.64	21.55	0.00	0.20	-0.03	0.00	1.84

121	0.00	0.00	0.21	-0.03	0.00	0.00	19.33	0.00	0.20	-0.03	0.00	1.65	21.93	0.00	0.21	-0.03	0.00	1.85
122	0.00	0.00	0.21	-0.04	0.00	0.00	19.67	0.00	0.21	-0.04	0.00	1.66	22.31	0.00	0.21	-0.04	0.00	1.86
123	0.00	0.00	0.22	-0.04	0.00	0.00	20.02	0.00	0.22	-0.04	0.00	1.66	22.70	0.00	0.22	-0.04	0.00	1.87
124	0.00	0.00	0.23	-0.04	0.00	0.00	20.36	0.00	0.23	-0.04	0.00	1.67	23.09	0.00	0.23	-0.04	0.00	1.88
125	0.00	0.00	0.24	-0.04	0.00	0.00	20.71	0.00	0.23	-0.04	0.00	1.68	23.48	0.00	0.24	-0.04	0.00	1.89
126	0.00	0.00	0.25	-0.04	0.00	0.00	21.06	0.00	0.24	-0.04	0.00	1.69	23.88	0.00	0.25	-0.04	0.00	1.89
127	0.00	0.00	0.26	-0.04	0.00	0.00	21.42	0.00	0.25	-0.04	0.00	1.69	24.27	0.00	0.25	-0.04	0.00	1.90
128	0.00	0.00	0.26	-0.05	0.00	0.00	21.78	0.00	0.26	-0.04	0.00	1.72	24.67	0.00	0.26	-0.05	0.00	1.92
129	0.00	0.00	0.27	-0.05	0.00	0.00	22.14	0.00	0.27	-0.05	0.00	1.73	25.08	0.00	0.27	-0.05	0.00	1.94
130	0.00	0.00	0.28	-0.05	0.00	0.00	22.50	0.00	0.28	-0.05	0.00	1.75	25.49	0.00	0.28	-0.05	0.00	1.96
131	0.00	0.00	0.30	-0.06	0.00	0.00	22.87	0.00	0.29	-0.05	0.00	1.76	25.90	0.00	0.29	-0.06	0.00	1.97
132	0.00	0.00	0.31	-0.06	0.00	0.00	23.24	0.00	0.30	-0.06	0.00	1.78	26.31	0.00	0.31	-0.06	0.00	1.99
133	0.00	0.00	0.32	-0.06	0.00	0.00	23.61	0.00	0.32	-0.06	0.00	1.78	26.73	0.00	0.32	-0.06	0.00	2.00
134	0.00	0.00	0.33	-0.07	0.00	0.00	23.99	0.00	0.33	-0.06	0.00	1.79	27.15	0.00	0.33	-0.07	0.00	2.00
135	0.00	0.00	0.35	-0.07	0.00	0.00	24.36	0.00	0.34	-0.07	0.00	1.80	27.57	0.00	0.35	-0.07	0.00	2.01
136	0.00	0.00	0.36	-0.07	0.00	0.00	24.74	0.00	0.36	-0.07	0.00	1.80	27.99	0.00	0.36	-0.07	0.00	2.01
137	0.00	0.00	0.38	-0.08	0.00	0.00	25.12	0.00	0.37	-0.07	0.00	1.80	28.41	0.00	0.38	-0.07	0.00	2.01
138	0.00	0.00	0.40	-0.08	0.00	0.00	25.49	0.00	0.39	-0.07	0.00	1.80	28.83	0.00	0.39	-0.07	0.00	2.01
139	0.00	0.00	0.41	-0.08	0.00	0.00	25.87	0.00	0.41	-0.07	0.00	1.80	29.25	0.00	0.41	-0.07	0.00	2.01

∠ 4.9° ab

4.0' DIA. GRID

MATERIAL SPECIFICATIONS

ROUND TAPERED STEEL SELF SUPPORT ANTENNA POLE STRUCTURE

1. The antenna pole shall be Union Metal Corporation Design No. RA500-B11-Y1 as shown on Drawing No. RA500-B11. This drawing is the property of Union Metal Corporation and cannot be copied without the express written consent of Union Metal Corporation.
2. The pole shall be constructed of only ASTM-A595 GR. A tubes. The tubes shall be manufactured using a cold rolled mandrel process to form a round cross section with one longitudinal weld seam. The bottom (3) three tubes shall be manufactured using a multi-ply construction to achieve the required wall thickness. Multi-Sided break formed sections have higher wind drag coefficients and have exhibited poor fatigue performance and are therefore unacceptable on this project.
3. The structure shall be designed in accordance with the Florida Building Code to support (1) one 4 foot diameter grid dish for ITFS, (1) one VHF log period, (1) one UHF log period and (1) one FM cross folded antenna. The design wind speed shall be 150 MPH with an Importance Factor of 1.15. The Gust Effect Factor shall be 1.05. The Wind Directionality Factor shall be 0.95. An additional factor of 1.30 shall be applied to the wind pressure to account for the increased wind drag due to step bolts and climbing cable. No Load Reduction or allowable stress increase shall be allowed in the design. The structure shall also meet Fatigue Category I for high mast structures per the 2001 AASHTO Standard Specifications for Structural Supports for Highway Signs, Luminaires and Traffic Signals, including the 2003 Interim.
4. The pole finish shall be hot dipped galvanized in accordance with ASTM-A123.
5. The concrete foundation shall be designed based on soil borings provided by the contractor. The foundation shall use a 30" bolt circle diameter for the anchor bolts. The anchor bolts shall conform to ASTM-F1554 GR55.
6. All pole and foundation calculations and design drawings shall be prepared, signed and sealed by a State of Florida licensed Professional Engineer employed by the pole manufacturer. The pole calculations shall consist of structure geometry, applied loads, forces, applied stresses, allowable stresses, combined stress ratios, and deflections calculated at not greater than one foot increments along the pole and at the beginning and end of all telescopic field joints.

D.N. Fritz
7-1-05

David N. Fritz
678 Tuscarawas Ave.
Brewster, Ohio 44613
54936

MIAMI DADE COUNTY PUBLIC SCHOOLS
DRILLED SHAFT ANALYSIS - 2001 AASHTO SPECIFICATIONS
Cohesionless Soils:

Design No.	**RA500-B11-Y1**
Axial (lbs)	10265
Shear (lbs)	8261
Moment (ft-lbs)	617208
Torsion (ft-lbs)	2319
Soil Unit Wt (pcf)	43
Friction Angle(deg)	30
Friction Coefficient	0.4
Overload Safety Factor (Overturning)	2.5
Overload Safety Factor (Torsion)	1
Wind Increase	1
Diameter (ft)	**4**
Depth (ft)	**19.62**
Kp	3.00
Brom's Eqn. >= 0 (Overturning)	1
Min. Depth (Torsion)	2.68
Mmax (ft-lbs)	635057
depth to Mmax (ft)	3.28

Concrete Design:

Load Factor	1.3
Strength Reduction Factor	0.7
Concrete Strength (psi)	3000
Reinforcing Steel Yield (psi)	60000
Concrete Cover (in)	3
Shear Reinf. Dia. (in)	0.5
Tension Reinf. Dia. (in)	**1.25**
No. of Bars	**17**
e (in)	742.40
As (in^2)	20.86
Ag (in^2)	1809.56
m	23.53
D (in)	48.00
Ds (in)	39.75
p - reinforcement ratio	0.01153
phi*Pn (lbs)	14471
Pu (lbs)	13345

David N. Fritz
678 Tuscarawas Ave.
Brewster, Ohio 44613
54936

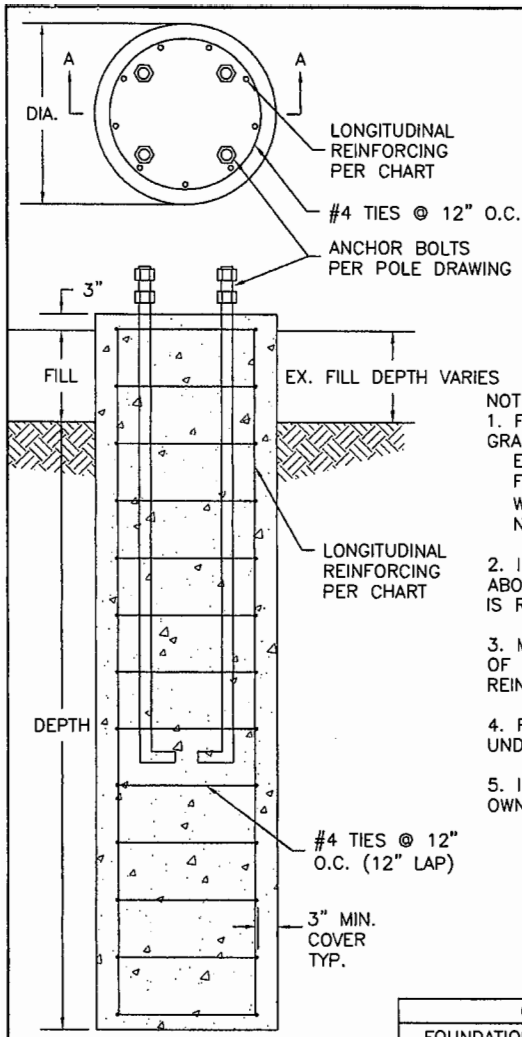

SECTION A–A

David N. Fritz
678 Tuscarawas Ave.
Brewster, Ohio 44613
54936

NOTES:

1. FOUNDATION IS BASED ON WELL GRADED GRANULAR SOIL CONDITIONS AS FOLLOWS:
   EFFECTIVE UNIT WT. = 43 PCF
   FRICTION ANGLE = 30 DEG.
   WATER TABLE 4'–0" BELOW SURFACE
   NON–SLOPING LEVEL GROUND SURFACE

2. IF ACTUAL SITE CONDITIONS VARY FROM ABOVE ASSUMPTION, FOUNDATION REDESIGN IS REQUIRED.

3. MIN. CONCRETE COMPRESSIVE STRENGTH OF 3,000 PSI @ 28 DAYS.
REINFORCING: ASTM A615 GR. 60.

4. FOUNDATION SHALL BE CAST AGAINST UNDISTURBED SOIL.

5. IF REQUIRED, INSTALL CONDUIT PER OWNER SPECIFICATIONS.

CONCRETE FOUNDATION DATA

FOUNDATION ID	DIAMETER	DEPTH	LONGITUDINAL REINFORCING
RA500–B11–Y1	4'–0"	20'–0"	17–#10

ANTENNA POLE FOUNDATION DESIGN
STATE SCHOOL FFF1 AT DORAL CITY
MIAMI DADE COUNTY PUBLIC SCHOOLS

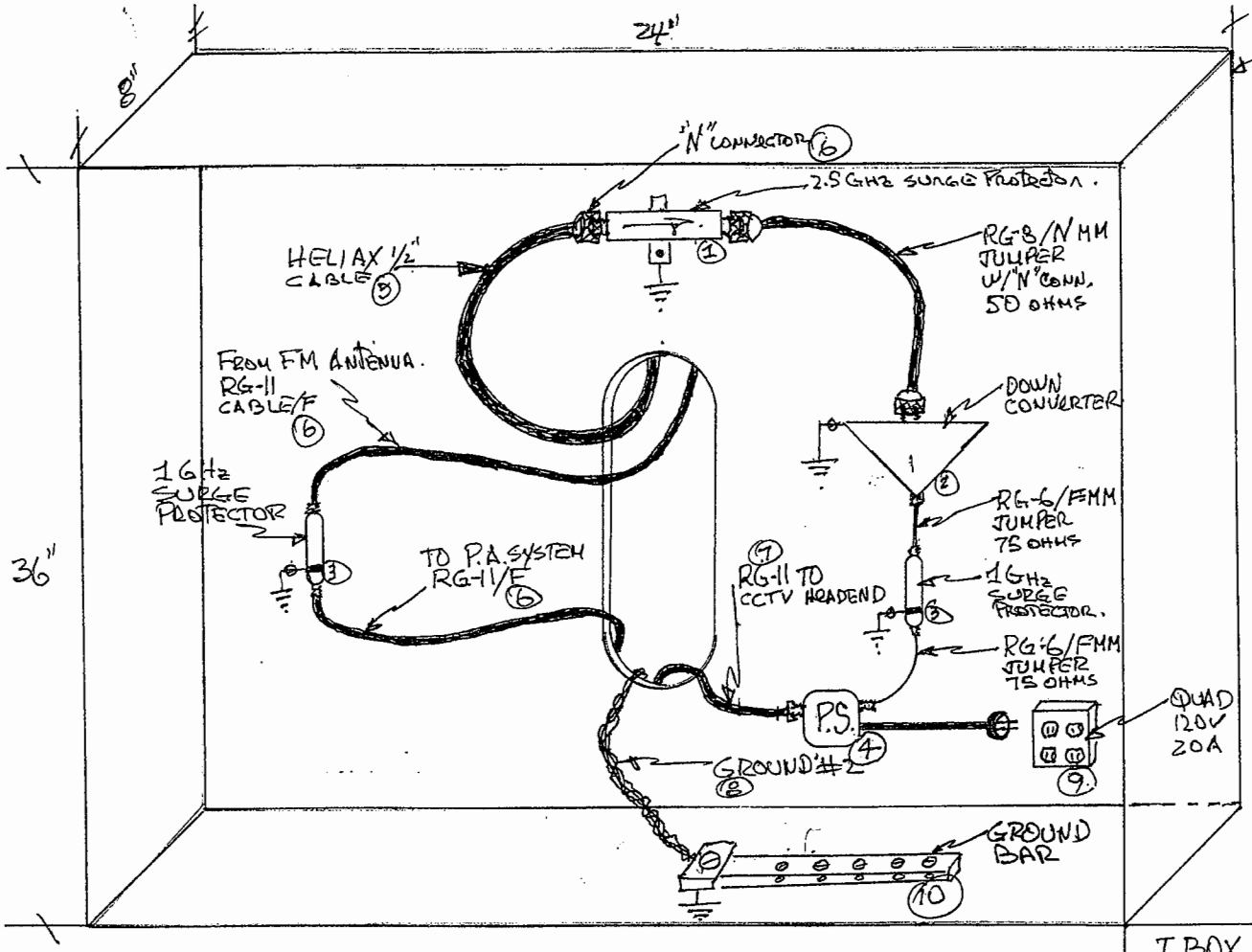

NOTE: WHEN ORDERING A DESIGN WITH THE JUNCTION BOX, ADD A "J" TO DESIGN # RA 500-B11-Y1J

1- SURGE PROTECTOR PASTERNACK ENTERPRISE PE 7301-1 2.5GHz 50 Ω
2- DOWN CONVERTER TSI SIDC-3733
3. SURGE PROTECTOR TONER, 75 OHMS F 212 FF 75 F225-31
4. Power supply TSI
5. HELIAX 1/2" SUPERFLEX ANDREW FSJ4-50B
6. N CONNECTOR ANDREW F4PNNV2-H
7. RG-11 CABLE BELDEN 1525A
8. GROUND CABLE #2 CONNECT TO 3 GROUND ROD ON DELTA CONF AND TO WATER SYSTEM.
9. QUAD ELECTRICAL OUT LET, 120 V 20 AMP.
10. GROUND BAR

J. BOX ITFS TOWER APPENDIX 1

DIST SETUP ALL LOCATIONS

FIELD ENG. 11/2008. M. GARCIA

REV: 1.0 01/22/2010 M.G.

Product Specifications

HLN-3 EBS Downconverter Solution

For ITFS and Commercial MMDS Applications

Educational Broadcast System (EBS) proponents and operators now have a new choice for new installations and replacement downconverters. The HLN 3 commercial quality down-converter fulfills today's EBS needs by addressing immediate requirements for FCC Rule Part 27 specified replacement downconverters for existing receive sites. Industry consolidation has left the educational market with few choices in new products supporting operational systems. The HLN-3 addresses this need by addressing the new FCC mandated replacement downconverter specification. The first truly new design in years has enhanced technology to increase reliability and increased immunity from interference generated by adjacent band fixed and mobile services. This unit replaces the Conifer HLN Series 1 and 2 converters which have been the ITFS industry standard for many years.

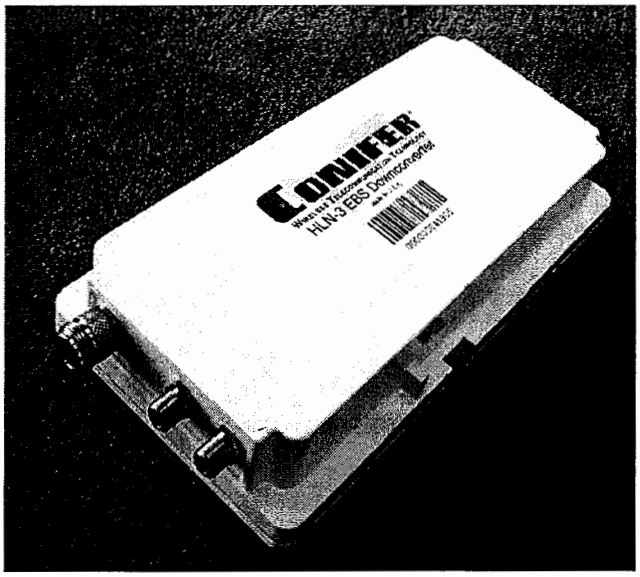

State-of-the-Art Design Techniques Utilizing

- ***Embedded Microprocessor Control***
- ***DSP Technology***

Features and Benefits

- **Ruggedized** powder coated aluminum case with stainless steel hardware provides years of corrosion free service in harsh environments
- **Sophisticated** power supply system switching technology to mitigate voltage sensitivity and lightning damage. It also provides for long IF cable runs and short circuit protection.
- **Brickwall** Input Bandpass Filtering
- **Gain and Noise Figure** options available to meet your requirements
- **Compatible** with QAM, VSB, and Analog signals
- **OptiMode™** Interference Rejection Circuitry

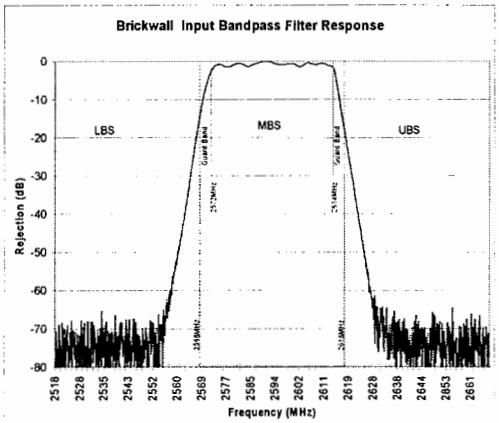

Conifer Wireless
1635 W. 12th Place
Tempe, AZ 85281 USA
Phone 480-315-1[illegible]
www.conifer[illegible].com

CONIFER®
WIRELESS TELECOMMUNICATION TECHNOLOGY

Product Specifications

Specifications	HLN-3
Input Frequency	2572MHz-2614MHz 42MHz Bandwidth
Output Frequency	294-336MHz
Gain	32dB
Gain Flatness	±2dB over Bandwidth
Maximum Output Power	+25dBmv/Channel
Input Filter	Dual Stage High Rejection 12 Pole
Noise Figure	3.5dB
Group Delay	± 20 ns over any 6 MHz channel
LO Frequency	2278MHz
LO Frequency Stability	± 10 KHz set point ± 30 KHz -40°C to +60°C
LO Phase Noise	> -60 dBc/Hz @ 100Hz > -80 dBc/Hz @ 1 KHz > -88 dBc/Hz @ 10 KHz > -105 dBc/Hz @ 100 KHz
Input Intercept Point (Out of Band)	+9dBm
IF Rejection	80 dB minimum
Output Impedance	75 Ohms
Output Connector	F-type female
LNB Return Loss	10 dB minimum
Temperature	-40 to +60 degrees C
Supply Voltage	16-24VDC
Supply Current	<300mA
Lightning Protection / Surge Protection	Transient voltage suppression at RF input exceeds 1500 Watts @ 1 mS w/ < 1 nS response time
Input Connector	"N" Type Female
Input AC Voltage (to Power Inserter)	90-240VAC (Switching Supply)
Converter Dimensions (w/o Bracket or Connectors)	H: 10.0" W: 4.75" D: 2.0"
Weight	2.6 lbs.
Finish	White Polyester Powder Coat Paint

Specifications are subject to change without notice

Conifer Wireless
1636 W. 12th Place
Tempe, AZ 85281, USA
Phone 480-315-1501
www.coniferusa.com

CONIFER
WIRELESS TELECOMMUNICATION TECHNOLOGY

PIII® 700 JCASS
75 Ohm Coaxial Cable
Trunk & Distribution

1100 CommScope Place
Hickory, NC 28603
(800) 982-1708
(828) 324-2200
Fax: (828) 324-3400
Int'l Fax: (828) 323-4989
www.commscope.com
CommScope Properties, LLC
All Rights Reserved

ISO 9001 REGISTERED

PRODUCT DESCRIPTION: (UNDERGROUND CONSTRUCTION)

SOLID ALUMINUM TUBE SWAGED ONTO DIELECTRIC CORE, FULLY BONDED COPPER CLAD CENTER CONDUCTOR, MIGRA-HEAL™ FLOODING COMPOUND, MEDIUM DENSITY PE JACKET

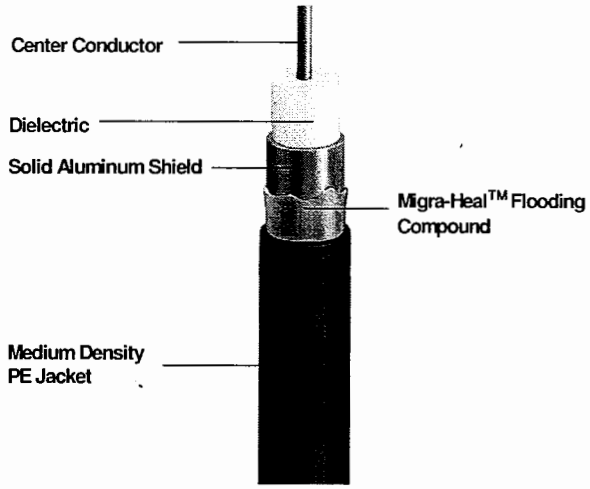

CENTER CONDUCTOR:
- COPPER CLAD ALUMINUM
- NOMINAL DIAMETER: 0.163" (4.14 mm)

DIELECTRIC:
- MICRO-CELLULAR FOAM PE
- NOMINAL DIAMETER 0.653" (16.59 mm)

SHIELD:
- SOLID ALUMINUM TUBE
- NOMINAL OUTER CONDUCTOR THICKNESS: 0.025" (0.63 mm)

JACKET:
- MEDIUM DENSITY PE (FLOODED WITH MIGRA-HEAL™ FOR UNDERGROUND CONSTRUCTION)
- NOMINAL JACKET THICKNESS: 0.031" (0.79 mm)
- NOMINAL DIAMETER OVER FLOODED JACKET: 0.775" (19.69 mm)

MECHANICAL CHARACTERISTICS:
- MINIMUM BEND RADIUS: BONDED = 6.5" (16.5 cm)
- MAXIMUM PULLING TENSION = 500 lbs. (227 kg_f)

Shipping Weight (lbs./kft): 206 - (kg/km): 307

ELECTRICAL CHARACTERISTICS:

CAPACITANCE:	15.3 ± 1.0 pf/ft. (50 ±3.0 nf/km)
IMPEDANCE:	75 ± 2 Ohms
VELOCITY OF PROPAGATION:	89% NOMINAL
NOMINAL DC LOOP RESISTANCE @ 68°F:	0.84 Ohms/1000 ft. (2.75 Ohms/km)
ATTENUATION @ 68°F (20°C):	

@ Frequency MHz	dB/100 ft. (MAX.)	dB/100 meters (MAX.)
5 MHz	0.11	0.36
55 MHz	0.36	1.18
83 MHz	0.45	1.48
211 MHz	0.73	2.40
250 MHz	0.81	2.66
300 MHz	0.90	2.95
350 MHz	0.98	3.22
400 MHz	1.05	3.45
450 MHz	1.12	3.67
500 MHz	1.19	3.90
550 MHz	1.25	4.10
600 MHz	1.31	4.30
750 MHz	1.49	4.89
865 MHz	1.62	5.32
1000 MHz	1.75	5.74

RoHS COMPLIANT

Drawing not to scale.
Specifications subject to change.
Revision: 06/07/07

ATTACHMENT B CONT'D

TECHNICAL REQUIREMENTS AND CRITERIA

Proposers must also comply with the following sections of the Miami-Dade County Public Schools ("M-DCPS") Master Specification Guidelines, as applicable:

Section

01040 Coordination
01045 Cutting and Patching
01050 Field Engineering
01340 Shop Drawings, Product Data and Samples
01510 Temporary Utilities
01530 Barriers
01600 Materials and Equipment
01700 Contract Closeout
01730 Operation and Maintenance Data
01740 Warranties
02221 Excavating, Backfilling and Compaction for Utilities
03300 Cast-in-Place Concrete
16112 Raceways and Conduits
16120 Wire and Cable
16131 Outlet, Pull and Junction Boxes
16402 Electrical Site Utilities
16450 Grounding
16670 Lightning Protection System

The sections noted above can be found on the District website as follows:

http://facilities.dadeschools.net/2004-MasterSpec.asp